Grand Challenge Status

D. Olson

19 June 1998

RCF Mtg, BNL

Outline

- Reminder: “What is the GC project?”
- T3E usage status
- The GC data access software status
- MDC1 preparations
- demo

Reminder:
“What is the Grand Challenge Project?”

- 3-year (FY97,98,99) project funded by DOE MICS (~ 4 FTE) and HENP effort
- Collaboration between CS & HENP
- In progress since March 1997
- Simulated data production on T3E
- Data access at RHIC (prototype or stepping stone for LHC)

T3E Status

- mcurie.nersc, jaromir.psc
  - event generators running - venus, rqmd, hijing
  - CERNlib ported & installed (27 May 1998)
    - (thanks to Mark Durst, Pavel Nevski, others)
  - STAR GEANT runs on mcurie (May 98)
    - (same acknowledgements)
  - STARProd, simulations production, getting underway

Data access software status

- Storage manager & client code
  - first execution of integrated components 15 May 1998
  - code cleanup and organization proceeding
  - preview & demo at BNL 17 June 1998
  - integration with analysis code - next
  - data mining component of MDC1 milestone for RCF

Data access s/w (simple view)

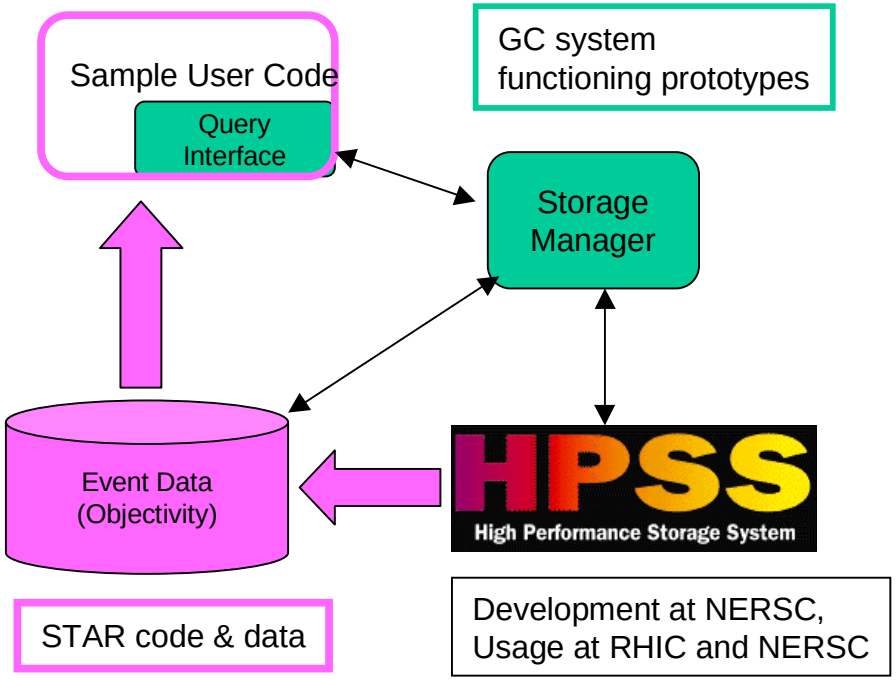

- key developers
  - query estimator
    Henrik Nordberg
  - query monitor
    Alex Sim
  - cache manager
    Luis Bernardo
  - query object
    Jeff Porter
  - order-optimized iterator
    Dave Malon
  - tagDB
    Dave Zimmerman,
    Mark Pollack

RHIC Analysis Architecture

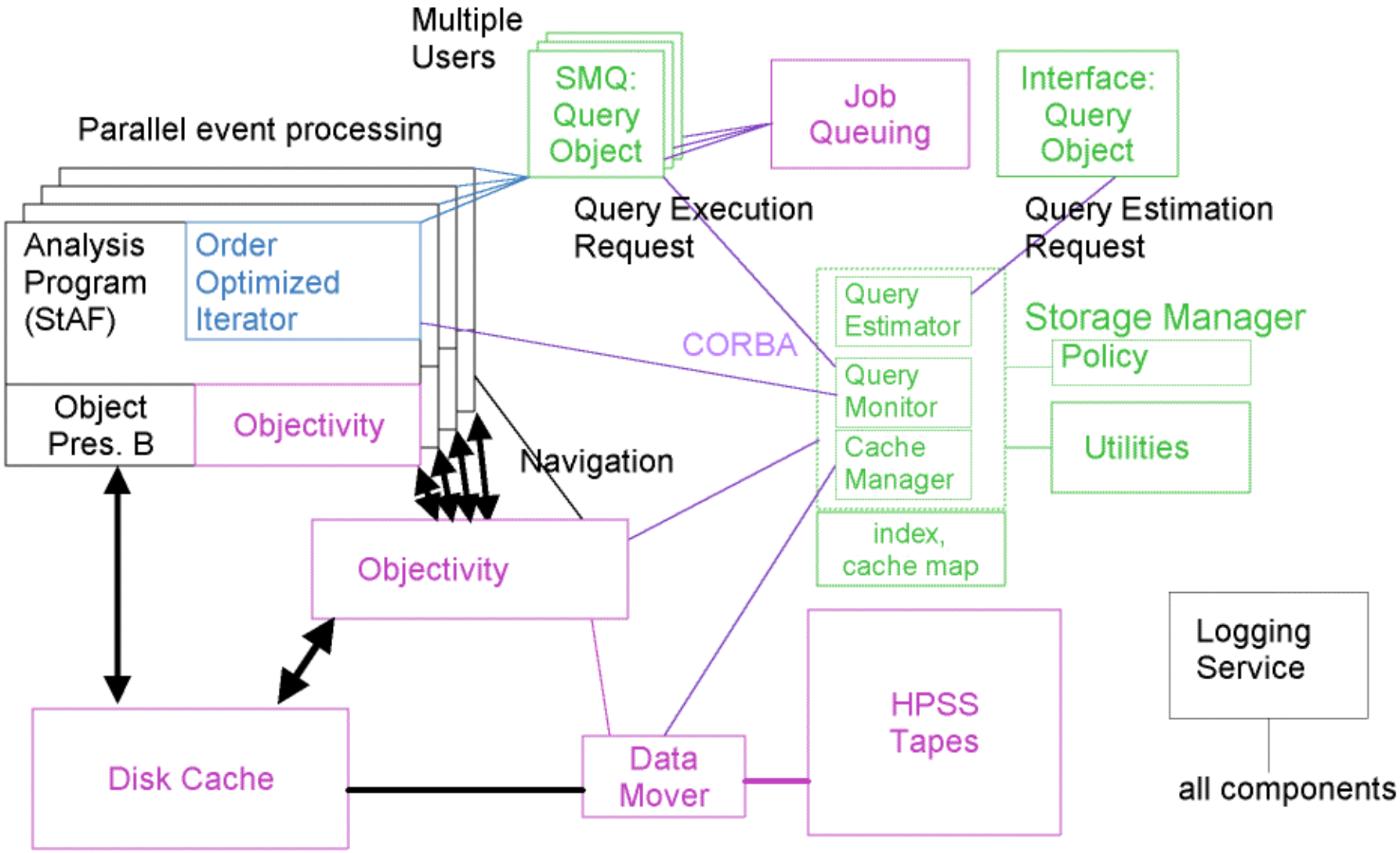

D. Olson, Dec 97

Current Status of GC Software

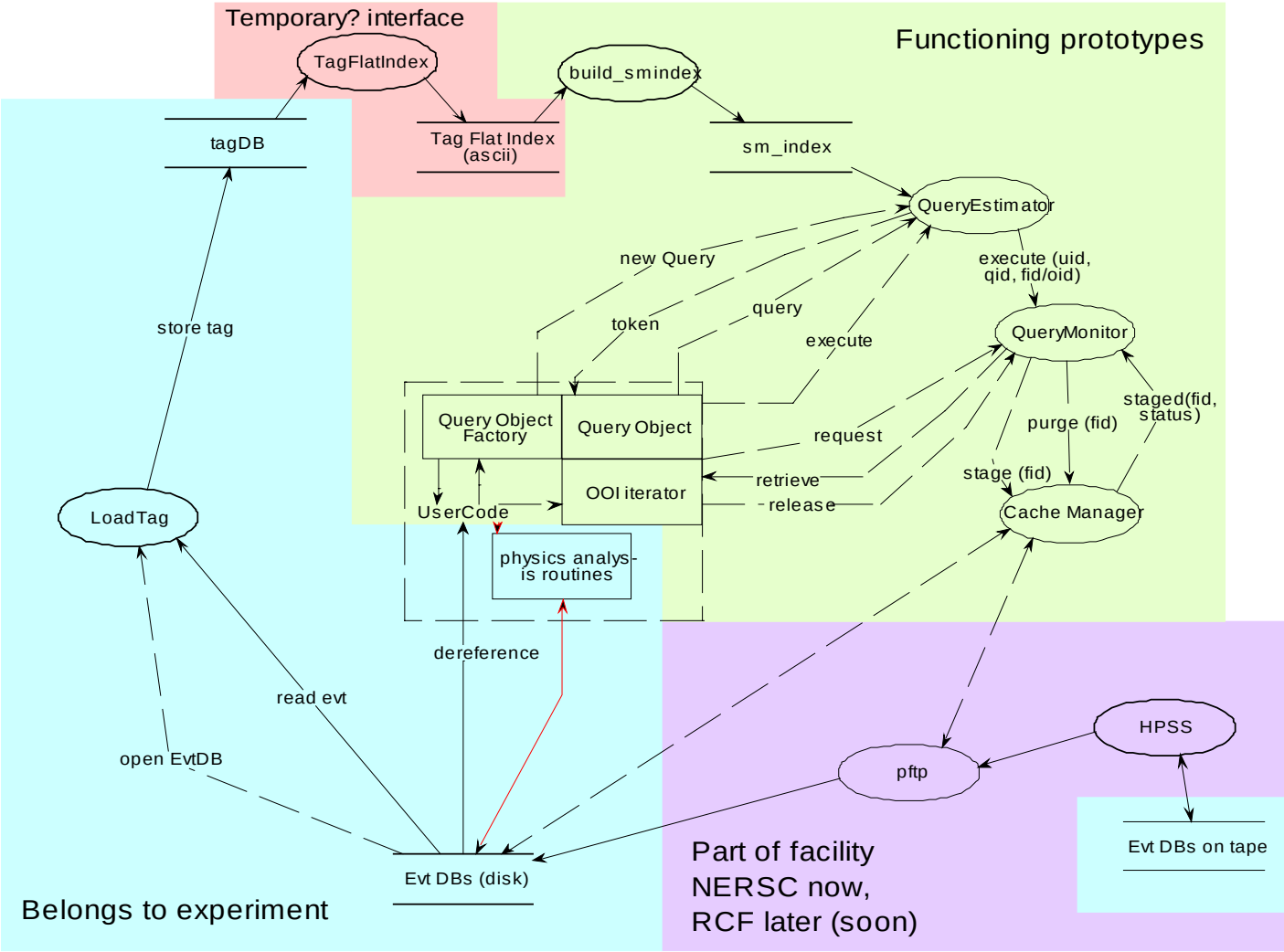

Load Tag
(example diagram)

Load tagDB

Description

Select EvtDB

open EvtDB

Scan

Iterate oParticles

read event

compute tag

store tag

End Iteration

End EvtDB

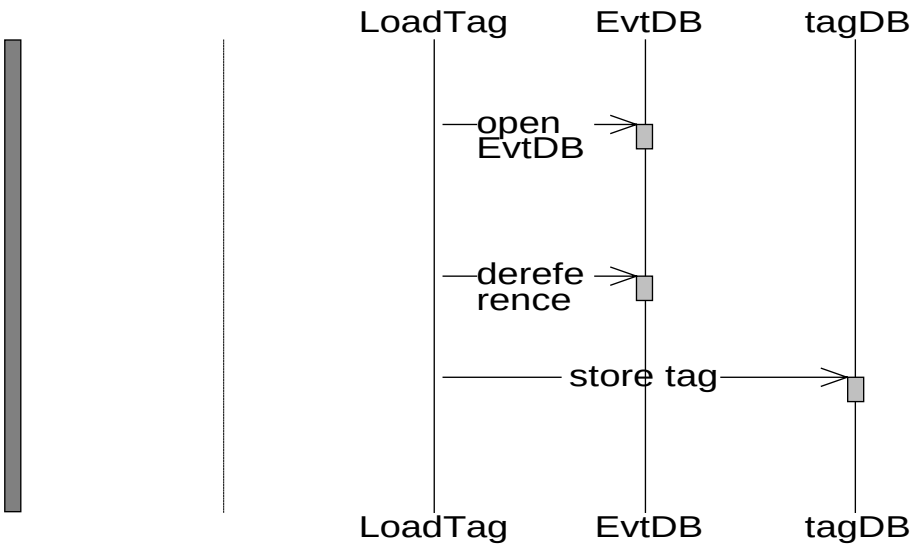

Query execution scenario

Query Execution

Description

- New Query
  - create query object
  - bind to qe and register new query object
  - query token is returned
  - issue predicate
  - user decides to execute
  - execute query
  - qe tells qm to execute qid
  - iterate over query results
    - next
      - release previous file
      - request oid sublist
        - file is staged
        - stage file
      - retrieve oid sublist
    - return next
    - return oid ref
    - retrieve this event and process it
  - End Iteration
- End Query

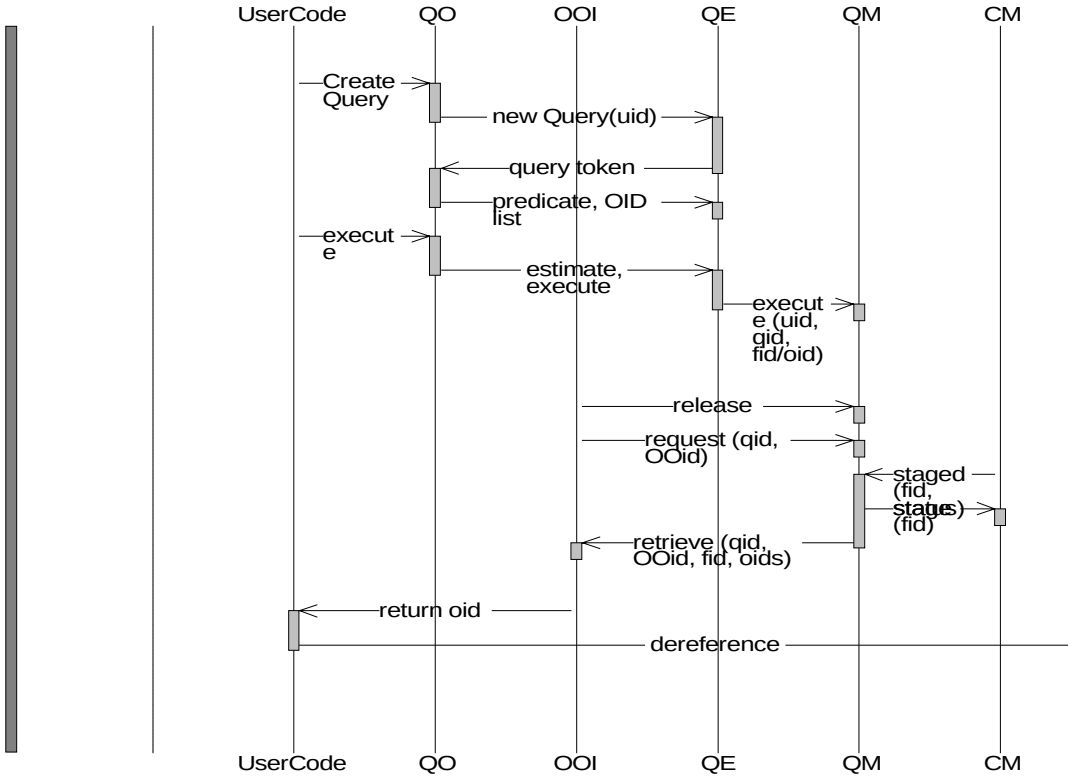

Features (MDC1)

- Extract tag parameters for index
  - base attributes & computed values
- Query estimation
  - # events, # files (disk, tape), # seconds
- Query execution
  - order optimization (sort OID's by file)
  - return OID's as files are staged
- Cache management
  - pre-fetch files
  - coordinate multiple queries

In Progress

- Robustness testing, hardening
- Add logging, monitoring of GC components
- Connection to real analysis code (connect Objectivity to analysis code)
- Define MDC scenarios for measurements
- Data mining scenarios of experiments

Interfacing to analysis code

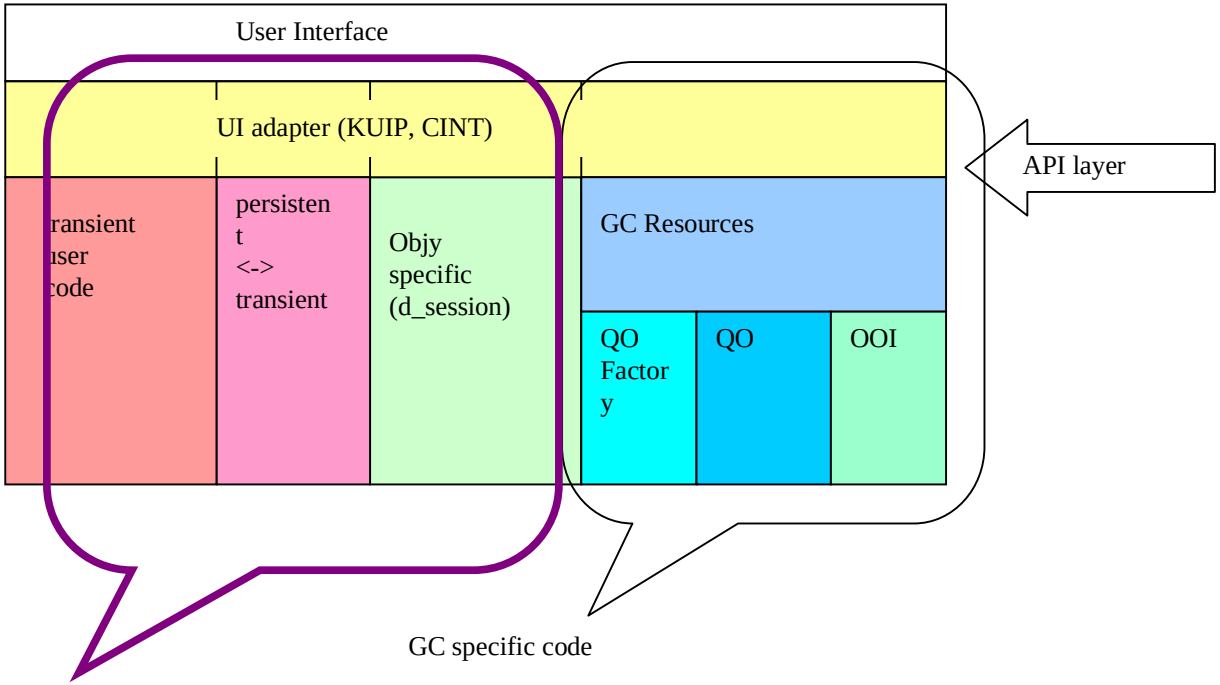

Needs to be done

Sample driver code for client

http://www-rnc.lbl.gov/GC/meetings/misc/do19jun98/TagQuery4.C

http://www-rnc.lbl.gov/GC/meetings/misc/do19jun98/Usercode.C

orbixd

```
[orbixd: Registering Persistent Server QueryMonitor(pid = 5683) ]
[orbixd: Dynamically assigning internet port 1593 ]
[orbixd: New IIOP Connection (pdsfsu32.lbl.gov:1570) ]
[orbixd: Processing Server Details request :  QueryEstimator/0/newQuery() ]
[orbixd: redirecting request to QueryEstimator on port 1592]
[orbixd: Processing Server Details request :  QueryMonitor//_IT_PING(malon) ]
[orbixd: Processing Server Details request :  QueryMonitor/1/getNextSubList()
]
[orbixd: redirecting request to QueryMonitor on port 1593]
[orbixd: Processing Server Details request :  QueryMonitor//_IT_PING(malon) ]
```

cmanager

```
Will start thread to stage file auau_minb_6601_6900.db with FID 245 and size 557
87520 bytes.
Stage request for file with FID 245 passed to thread.
Thread 20 will transfer file auau_minb_6601_6900.db of size 55787520 bytes.
QM asked for disk space left: 531 MBs.
Will start thread to stage file auau_minb_2101_2400.db with FID 228 and size 593
26464 bytes.
Stage request for file with FID 228 passed to thread.
Thread 23 will transfer file auau_minb_2101_2400.db of size 59326464 bytes.
File auau_minb_6601_6900.db with FID 245 staged.
QM informed that the file with FID 245 was staged.
QM asked for disk space left: 475 MBs.
Will start thread to stage file auau_minb_5101_5400.db with FID 239 and size 518
55360 bytes.
Stage request for file with FID 239 passed to thread.
Thread 26 will transfer file auau_minb_5101_5400.db of size 51855360 bytes.
File auau_minb_2101_2400.db with FID 228 staged.
QM informed that the file with FID 228 was staged.
QM asked for disk space left: 426 MBs.
Will start thread to stage file auau_minb_601_900.db with FID 243 and size 52977
664 bytes.
Stage request for file with FID 243 passed to thread.
Thread 29 will transfer file auau_minb_601_900.db of size 52977664 bytes.
```

qmonitor

```
file in the release list: 245
file in the release list: 228
Caching file: 243
before isFileInTheCache
after setFileCheck
243 : scheduled to be cached
fileno: 2 : getRequestedFileNumbers = 2
available file number >= requested file number
qe5810-91622223 is not ready any more from qmCP::isQueryStillReady
Fri May 15 14:36:35 1998
exiting from the qmLoop
Request incoming to IOR:00494f50000000184944c3a716d4576656e74497465726174 6f723a
312e300000000001000000000000000570001000400000011706473667373533322e6c626c2e676f76
0068062200000037 3a5c706473667373533322e6c626c2e676f763a51756572794d6f6e69746f723a
313a3a49523a716d4576656e74497465726174 6f72003a
        with operation name setNextSubList
Client user:
Fri May 15 14:36:37 1998
qmEI::setNextSubList
QID= qe5810-91622223
EIID= objRef
so far number of Files cached=6
so far number of Files served=6
```

qestimator

```
qe:: scanProperty("num_Pion_p") nHits: 41
qe:: do_quick_scan() Number of hits: 41
smEstimator:: getEstimator("qe5810-91622223") nToken=1
smEstimator:: getEstimator("qe5810-91622223") nToken=1
smEstimator:: getEstimator("qe5810-91622223") nToken=1
smEstimator:: getEstimator("qe5810-91622223") nToken=1
smEstimator:: getEstimator("qe5810-91622223") nToken=1
AIR: 600 < num_Pion_p < 610
qe:: scanProperty("num_Pion_p") nHits: 41
qe:: do_full_scan() Number of hits: 41
smEstimator:: getEstimator("qe5810-91622223") nToken=1
smEstimator:: getEstimator("qe5810-91622223") nToken=1
smEstimator:: getEstimator("qe5810-91622223") nToken=1
smEstimator:: getEstimator("qe5810-91622223") nToken=1
smEstimator:: getEstimator("qe5810-91622223") nToken=1
[QueryEstimator: New IIOP Connection (pdsfsu32.lbl.gov:1593) ]
smEstimator:: execute ("qe5810-91622223")
smEstimator:: getEstimator("qe5810-91622223") nToken=1
qe:: execute ("qe5810-91622223") m_clause= "600<num_Pion_p<610"
AIR: 600 < num_Pion_p < 610
qe:: scanProperty("num_Pion_p") nHits: 41
qe:: do_full_scan() Number of hits: 41
fileidset.length = 22 ,maximum=41
```

usercode

```
#240-3-259-3
        ObjRef 14dbase 240 lambdas: 18 out of 2591
DEBUG OOI:  releasing 240
DEBUG OOI:  more stuff is coming (getNextSublist)
DEBUG OOI:  more stuff is coming (setNextSublist)
DEBUG OOI:  response is here
#245-3-1-5
        ObjRef 15dbase 245 lambdas: 18 out of 2717
#245-3-1-91
        ObjRef 16dbase 245 lambdas: 21 out of 2605
#245-3-253-26
        ObjRef 17dbase 245 lambdas: 17 out of 2701
DEBUG OOI:  releasing 245
DEBUG OOI:  more stuff is coming (getNextSublist)
DEBUG OOI:  more stuff is coming (setNextSublist)
DEBUG OOI:  response is here
#228-3-1-49
        ObjRef 18dbase 228 lambdas: 8 out of 2632
#228-3-1-171
        ObjRef 19dbase 228 lambdas: 19 out of 2547
DEBUG OOI:  releasing 228
DEBUG OOI:  more stuff is coming (getNextSublist)
DEBUG OOI:  more stuff is coming (setNextSublist)
```

pdsfsu32 /gc-obj/SMDisk

```
-rw-r--r--   1 luis     users         269 May 15 00:24 qmcmiiop.ref
-rw-r--r--   1 luis     users         281 May 15 00:24 qmqeiiop.ref
-rwxr-xr-x   1 luis     users     2153568 Apr 29 07:20 qmtserver
-rwxr-xr-x   1 luis     users       24400 May 14 23:58 resetFDB
-rw-r--r--   1 luis     users        1076 May 15 11:32 sammi_run
luis@pdsfsu32[66] cd /gc-obj/SMDisk/
luis@pdsfsu32[67] ls -l
total 114176
-rw-r--r--   1 malon    users    57409536 May 15 14:32 auau_minb_1801_2100.db
-rw-r--r--   1 malon    users    59424768 May 15 14:32 auau_minb_301_600.db
luis@pdsfsu32[68]
```