solid 2

1. Introduction
2. Description
3. File Information
4. Materials
5. Load & Restraint Information
6. Study Property
7. Contact
8. Results
    a. Default Results
9. Appendix

---

1. Introduction

should be the same as 1st except for here is
1/2/3 restraint

Corrects earlier problem with one component left out of temperature restraint

---

2. Description

The system analyzed is a 2 mm slice of the ladder cut perpendicular to the long axis of the ladder and is composed of 6 layers.

The layers starting from the top:

1. Silicon, 50 microns thick and 19 mm wide
2. 3M acrylic adhesive, 467 MP, 51 microns thick and 22 mm wide
3. Aluminum Kapton cable, 137 microns thick and 22 mm wide
4. 3M acrylic adhesive, 467 MP, 51 microns thick and 22 mm wide
5. carbon composite ladder base, 130 microns thick and 22 mm wide
6. Sector support section of carbon composite, 200 microns thick and 10 mm wide

The analysis is really 1 D and addresses the large deflection that was found for the edge of the ladder that overhangs from the sector.

The bottom layer here, number 6, is constrained to be flat along the bottom surface, but it is allowed to stretch along this plane.

The aluminum Kapton cable is approximated as an isotropic material defined by a weighted average of the physical parameters. The composite CTE value is probably not too unreasonable since in flex circuit design, materials are somewhat matched to avoid breaking vias.

The carbon composite is incorrectly treated as isotropic, but the error introduced should show an increase in the thermal deformation.

The temperature change chosen for this analysis is 20 deg C.

---

3. File Information

Model name:	B ladder
Model location:	C:\Documents and Settings\Howard Wieman\My Documents\aps project\mechanical\ladder thermal thin\B ladder.SLDASM
Results location:	C:\Program Files\SolidWorks\COSMOS\work
Study name:	solid 2 (-Default-)

4. Materials

No.	Part Name	Material	Mass	Volume
1	A carbon ladder floor-1	[SW]ladder carbon corrected	8.86643e-006 kg	5.72e-009 m^3
2	acrylic adhesive-1	[SW]acrylic adhesive	2.59855e-006 kg	2.2352e-009 m^3
3	acrylic adhesive-2	[SW]acrylic adhesive	2.59855e-006 kg	2.2352e-009 m^3
4	cable only-1	[SW]cable mix no adhesive	1.0023e-005 kg	6.03504e-009 m^3
5	chip-1	[SW]silicon D	4.41771e-006 kg	1.9e-009 m^3
6	sector piece-1	[SW]ladder carbon corrected	6.2003e-006 kg	4e-009 m^3

5. Load & Restraint Information

Restraint	
Restraint-6 <sector piece-1>	on **1 Vertex(s)** fixed.
Description:	
Restraint-7 <sector piece-1>	on **1 Vertex(s)** with respect to reference geometry **Front** with displacement **0 mm** along plane Dir 2 displacement **0 mm** normal to reference plane
Description:	
Restraint-8 <sector piece-1>	on **1 Vertex(s)** with respect to reference geometry **Top** with displacement **0 m** normal to

	reference plane
Description:	
Restraint-9 <sector piece-1, A carbon ladder floor-1, acrylic adhesive-1, cable only-1, acrylic adhesive-2, chip-1>	on **6 Face(s)** symmetry
Description:	
Restraint-10 <sector piece-1, A carbon ladder floor-1, acrylic adhesive-1, cable only-1, acrylic adhesive-2, chip-1>	on **6 Face(s)** symmetry
Description:	

Load	
Temperature-1 <A carbon ladder floor-1, acrylic adhesive-1, cable only-1, acrylic adhesive-2, chip-1, sector piece-1>	on **6 Component(s)** with temperature **320 Kelvin**
Description:	

---

6. Study Property

Mesh Information	
Mesh Type:	Solid mesh
Mesher Used:	Standard
Automatic Transition:	Off
Smooth Surface:	On
Jacobian Check:	4 Points

Element Size:	0.2809 mm
Tolerance:	0.014045 mm
Quality:	High
Number of elements:	19132
Number of nodes:	29795
Time to complete mesh(hh;mm;ss):	00:00:08
Computer name:	WIEMAN-M90

Solver Information	
Quality:	High
Solver Type:	FFEPlus
Option:	Include Thermal Effects
Thermal Option:	Input Temperature
Thermal Option:	Reference Temperature at zero strain: 300 Kelvin

---

7. Contact

Contact state: Touching faces - Bonded

---

8. Results

8a. Default Results

Name	Type	Min	Location	Max	Location
Stress1	VON: von Mises stress	0.0935215 psi Node: 12607	(1 mm, 0.36876 mm, -11 mm)	963.353 psi Node: 26035	(1 mm, 0.41876 mm, -1.31618 mm)
Displacement1	UY: Y Displacement	-9.59635e-007 m Node: 98	(-0.25 mm, 0 mm, -11 mm)	4.34975e-006 m Node: 12688	(1 mm, 0.36876 mm, 10.25 mm)

B ladder-solid 2-Stress-Stress1
JPEG

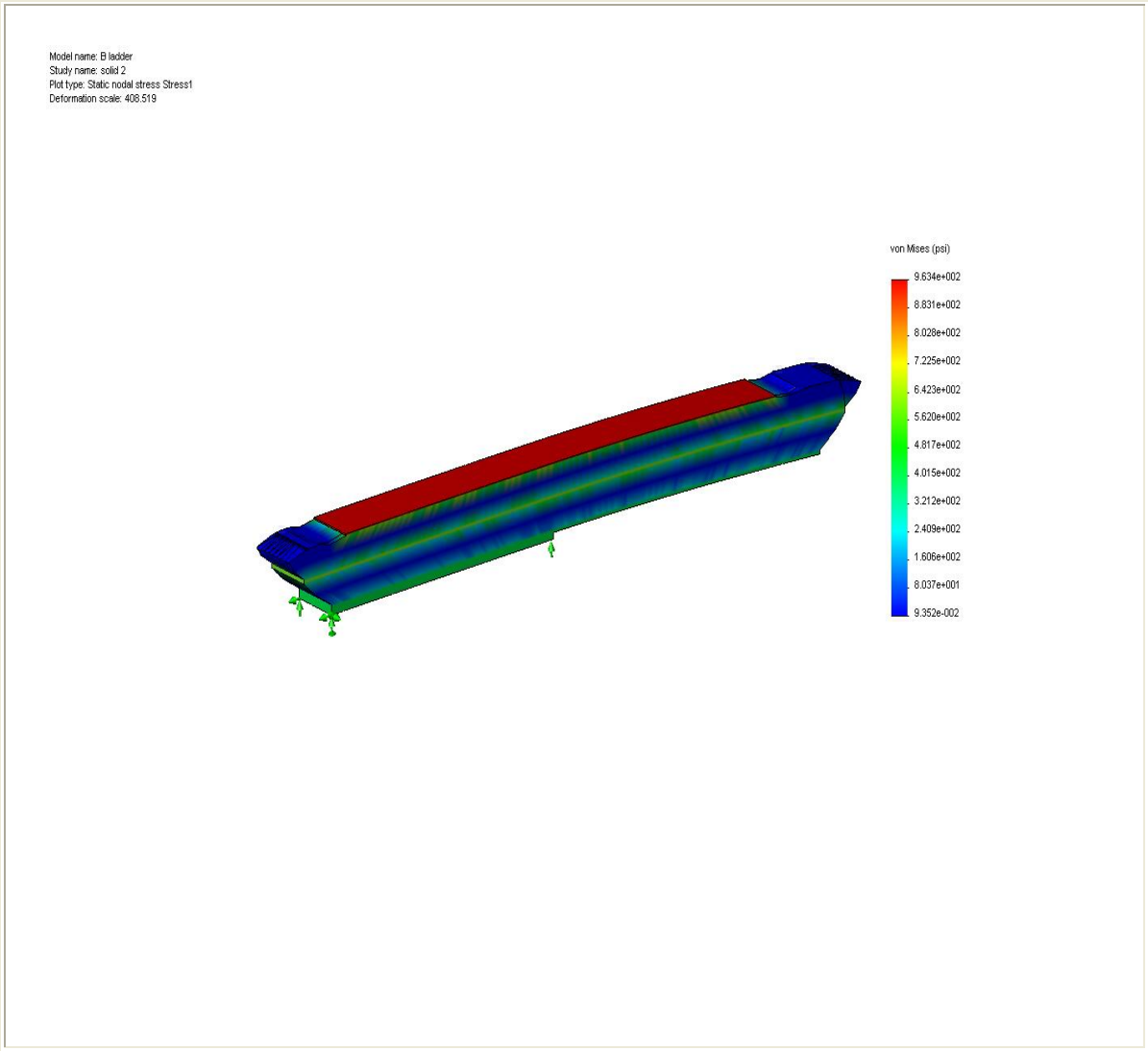

B ladder-solid 2-Displacement-Displacement1

JPEG

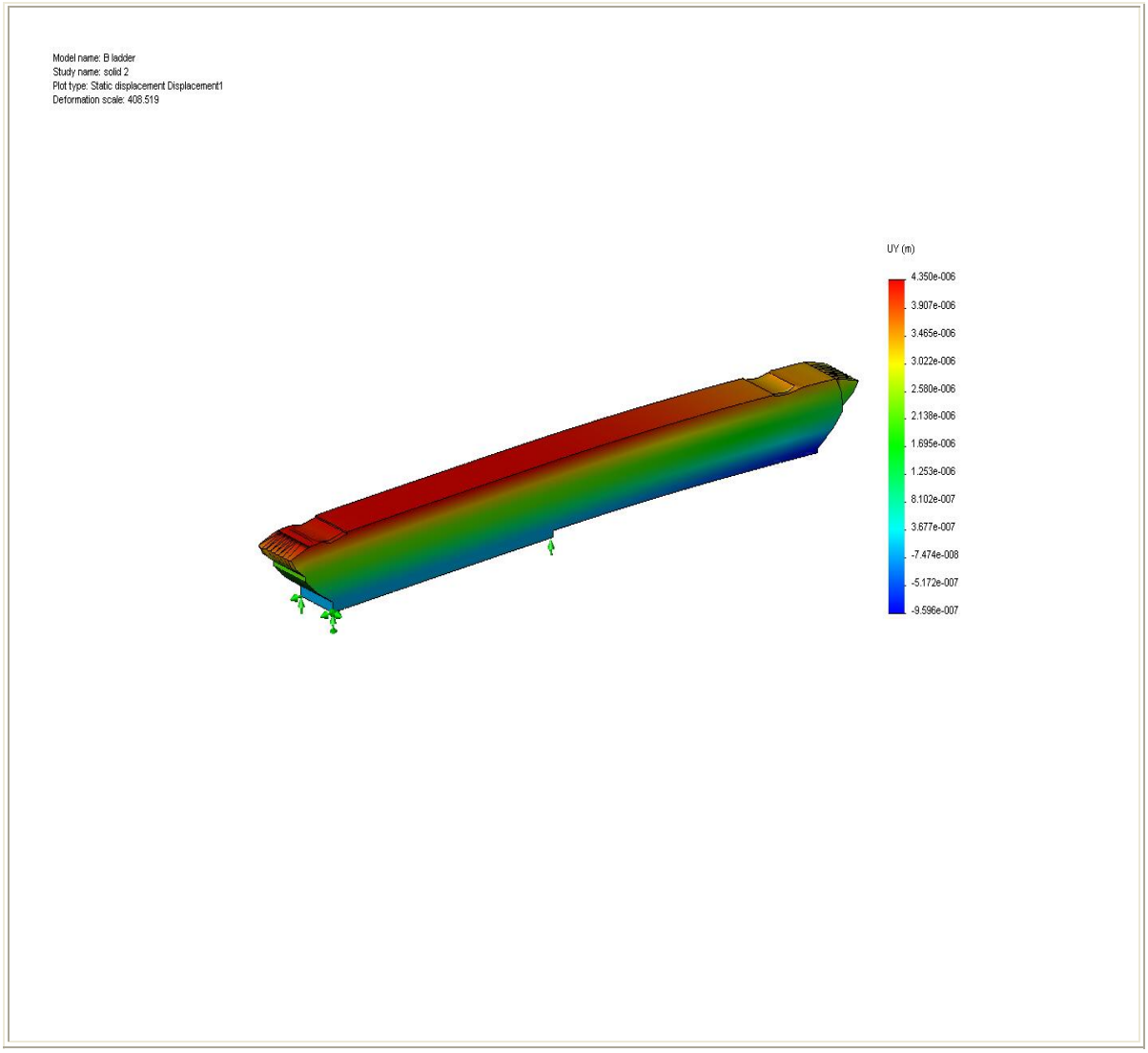

9. Appendix

Material name: [SW]ladder carbon corrected

Description:

Material Source: Used SolidWorks material

Material Library Name: carbon composite tube

Material Model Type: Linear Elastic Isotropic

Property Name	Value	Units	Value Type
Elastic modulus	1.3996e+011	N/m^2	Constant
Poisson's ratio	0.33	NA	Constant
Shear modulus	7.0396e+010	N/m^2	Constant
Mass density	1550.1	kg/m^3	Constant
Tensile strength	1.8961e+009	N/m^2	Constant
Yield strength	1.2273e+009	N/m^2	Constant
Thermal expansion coefficient	1e-006	/Kelvin	Constant
Thermal conductivity	46	W/(m.K)	Constant
Specific heat	920	J/(kg.K)	Constant

Material name: [SW]acrylic adhesive

Description:

Material Source: Used SolidWorks material

Material Library Name: carbon composite tube

Material Model Type: Linear Elastic Isotropic

Property Name	Value	Units	Value Type
Elastic modulus	44816	N/m^2	Constant
Poisson's ratio	0.49	NA	Constant
Shear modulus	15169	N/m^2	Constant
Mass density	1162.6	kg/m^3	Constant
Tensile strength	3.5163e+005	N/m^2	Constant
Yield strength	3.5163e+005	N/m^2	Constant
Thermal expansion coefficient	0.00072	/Kelvin	Constant
Thermal conductivity	0.17	W/(m.K)	Constant
Specific heat	1400	J/(kg.K)	Constant

Material name: [SW]cable mix no adhesive

Description:

Material Source: Used SolidWorks material

Material Library Name: carbon composite tube

Material Model Type: Linear Elastic Isotropic

Property Name	Value	Units	Value Type
Elastic modulus	2.0684e+010	N/m^2	Constant
Poisson's ratio	0.34	NA	Constant
Shear modulus	1.1032e+010	N/m^2	Constant
Mass density	1660.8	kg/m^3	Constant
Tensile strength	8.2392e+008	N/m^2	Constant
Yield strength	4.7367e+008	N/m^2	Constant
Thermal expansion coefficient	1.1e-005	/Kelvin	Constant
Thermal conductivity	0.2	W/(m.K)	Constant
Specific heat	1175	J/(kg.K)	Constant

Material name: [SW]silicon D

Description:

Material Source: Used SolidWorks material

Material Library Name: carbon composite tube

Material Model Type: Linear Elastic Isotropic

Property Name	Value	Units	Value Type
Elastic modulus	1.1032e+011	N/m^2	Constant
Poisson's ratio	0.28	NA	Constant
Shear modulus	4.8953e+010	N/m^2	Constant
Mass density	2325.1	kg/m^3	Constant
Tensile strength	1.1997e+008	N/m^2	Constant
Yield strength	1.1997e+008	N/m^2	Constant
Thermal expansion coefficient	3e-006	/Kelvin	Constant
Thermal conductivity	124	W/(m.K)	Constant

Specific heat	700	J/(kg.K)	Constant