Leo Lam doubled modulus

1. Introduction
2. File Information
3. Materials
4. Load & Restraint Information
5. Study Property
6. Contact
7. Results
    a. Default Results
8. Conclusion
9. Appendix

---

1. Introduction

Same as previous 10 cm run with Leo Lam, but with the elastic and shear modulus of the acrylic adhesive doubled.

Note:

Do not base your design decisions solely on the data presented in this report. Use this information in conjunction with experimental data and practical experience. Field testing is mandatory to validate your final design. COSMOSWorks helps you reduce your time-to-market by reducing but not eliminating field tests.

---

2. File Information

Model name:	L Leo Lam
Model location:	C:\Documents and Settings\Howard Wieman\My Documents\aps project\mechanical\ladder thermal thin 3\L Leo Lam.SLDASM
Results location:	C:\Program Files\SolidWorks\COSMOS\work
Study name:	stiff adhesive 10 cm (-stiff adhesive-)

---

3. Materials

No.	Part Name	Material	Mass	Volume
1	L Foam-1	[SW]RVC foam 3 percent	0.000289 kg	4.25e-006 m^3
2	L acrylic-1	[SW]acrylic adhesive stiff	6.49636e-005 kg	5.588e-008 m^3
3	L acrylic-2	[SW]acrylic adhesive stiff	6.49636e-005 kg	5.588e-008 m^3
4	L cable-1	[SW]cable mix no adhesive	0.000250574 kg	1.50876e-007 m^3
5	L cap bottom-1	[SW]ladder carbon corrected	0.000120906 kg	7.8e-008 m^3
6	L cap-1	[SW]ladder carbon corrected	0.000221661 kg	1.43e-007 m^3
7	L silicon-1	[SW]silicon D	0.000127881 kg	5.5e-008 m^3

---

4. Load & Restraint Information

Restraint	
Restraint-1 <L cap-1>	on **1 Vertex(s)** fixed.
Description:	
Restraint-2 <L cap-1>	on **1 Vertex(s)** with respect to reference geometry **Front** with displacement **0 m** along plane Dir 2 displacement **0 m** normal to reference plane
Description:	
Restraint-3 <L silicon-1, L acrylic-1, L cable-1, L acrylic-2, L cap-1, L Foam-1, L cap bottom-1>	on **7 Face(s)** symmetry
Description:	
Restraint-4 <L silicon-1, L acrylic-1, L cable-1, L acrylic-2, L cap-1, L Foam-1, L cap bottom-1>	on **7 Face(s)** symmetry
Description:	

Load	
Temperature-1 <L silicon-1, L acrylic-1, L cable-1, L acrylic-2, L cap-1, L Foam-1, L cap bottom-1>	on **7 Component(s)** with temperature **320 Kelvin**
Description:	

---

5. Study Property

Mesh Information	
Mesh Type:	Solid mesh
Mesher Used:	Standard
Automatic Transition:	Off
Smooth Surface:	On
Jacobian Check:	4 Points
Element Size:	0.09536 cm
Tolerance:	0.004768 cm
Quality:	High
Number of elements:	75919
Number of nodes:	110679
Time to complete mesh(hh;mm;ss):	00:00:44
Computer name:	WIEMAN-M90

Solver Information	
Quality:	High
Solver Type:	FFEPlus
Option:	Include Thermal Effects
Thermal Option:	Input Temperature
Thermal Option:	Reference Temperature at zero strain: 300 Kelvin

---

6. Contact

Contact state: Touching faces - Bonded

7. Results

7a. Default Results

Name	Type	Min	Location	Max	Location
Stress1	VON: von Mises stress	0.024536 psi Node: 48102	(0.94375 cm, -0.193126 cm, 5 cm)	367.502 psi Node: 82296	(0.987558 cm, -0.00843029 cm, -4.89324 cm)
Displacement1	URES: Resultant displacement	0 m Node: 64855	(-1.17893e-015 cm, -0.023876 cm, -5 cm)	1.67922e-005 m Node: 48336	(1.1 cm, -0.00508 cm, 5 cm)
Displacement2	UY: Y Displacement	-1.24375e-005 m Node: 88055	(-5.74717e-017 cm, -0.549876 cm, 5 cm)	4.37585e-006 m Node: 99441	(1.1 cm, 0.005 cm, -4.42857 cm)

L Leo Lam-stiff adhesive 10 cm-Stress-Stress1
JPEG

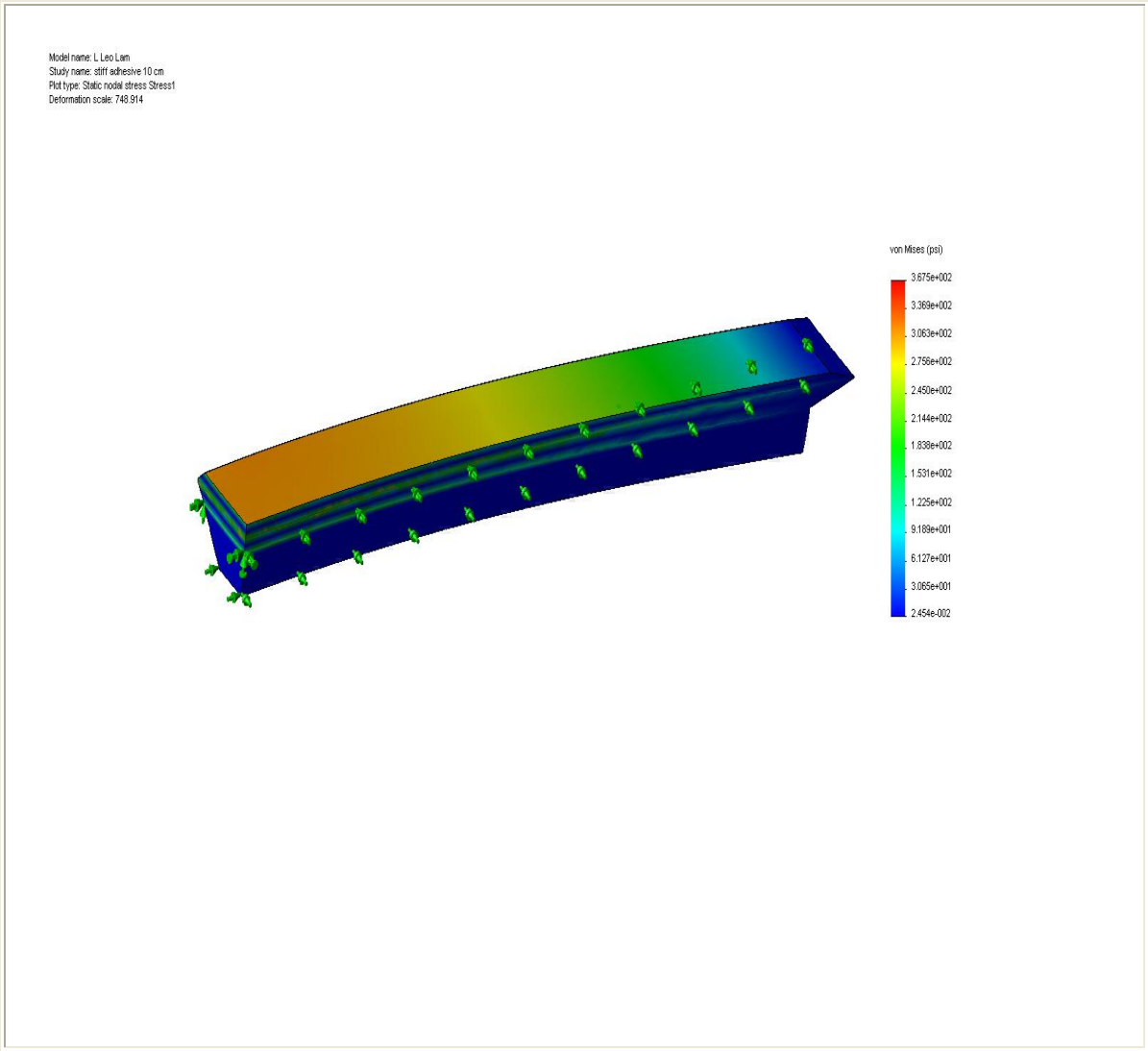

L Leo Lam-stiff adhesive 10 cm-Displacement-Displacement1

JPEG

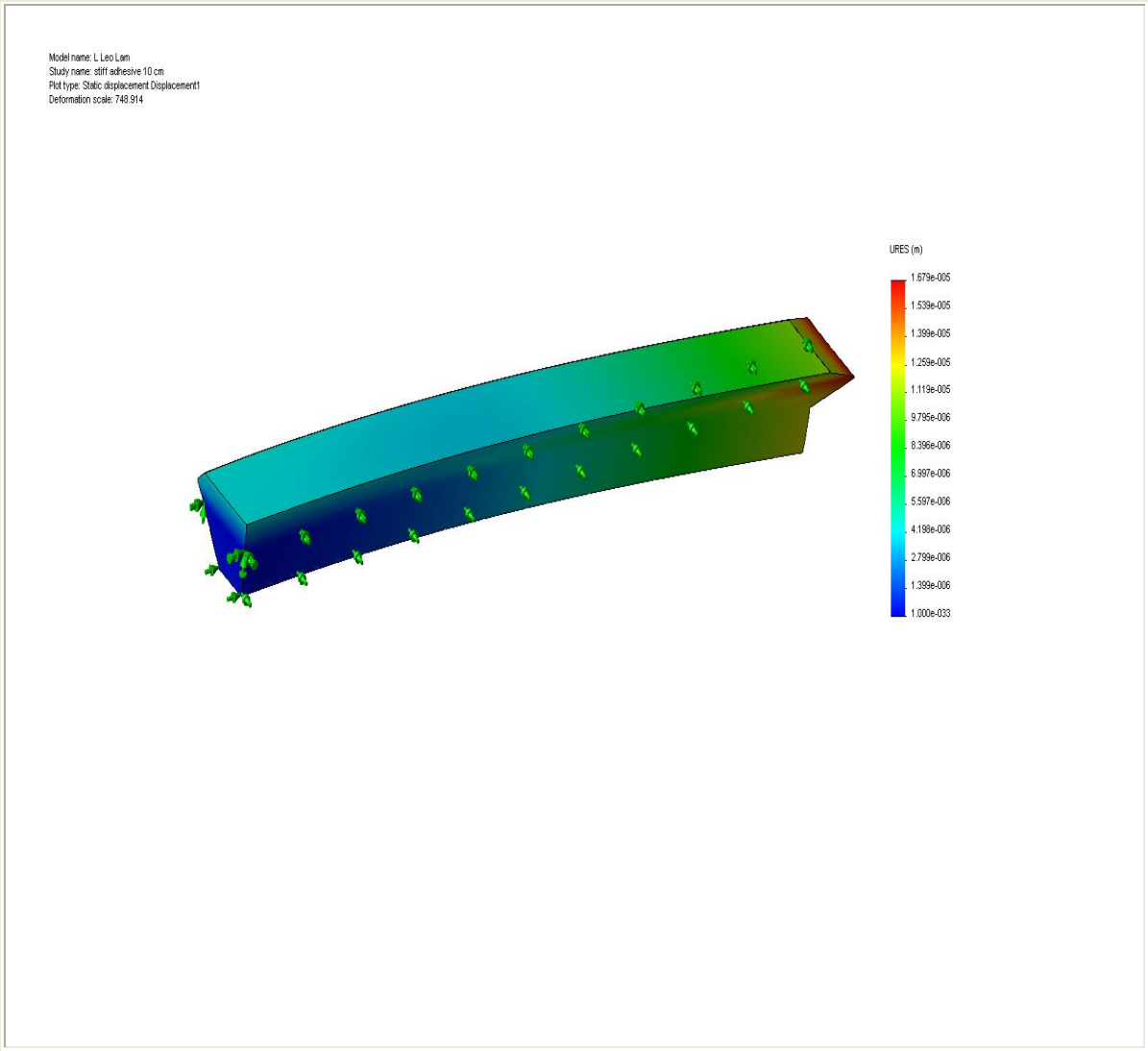

L Leo Lam-stiff adhesive 10 cm-Displacement-Displacement2

JPEG

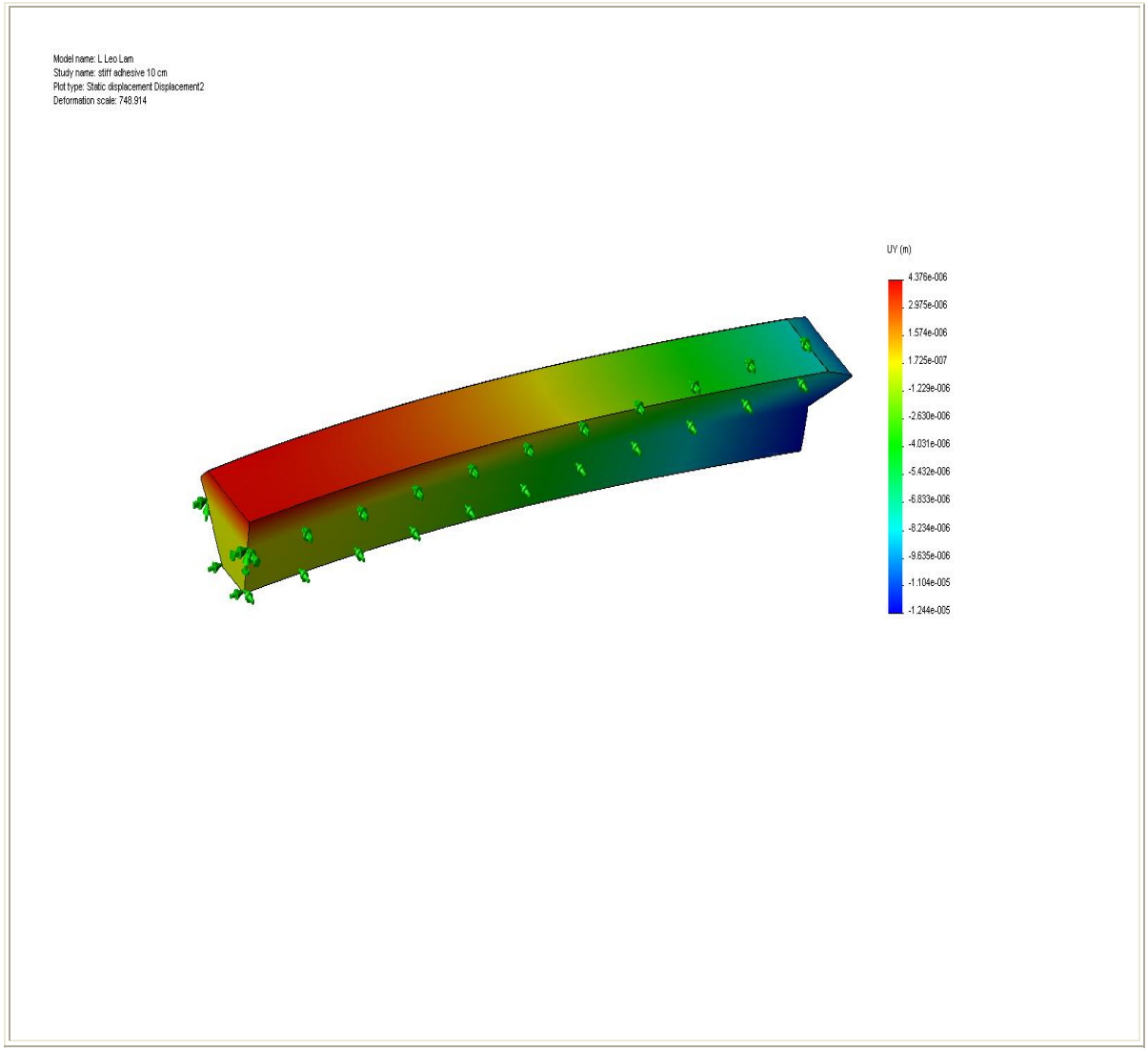

8. Conclusion

Doubling the acrylic shear and elastic modulus causes a 1.5 increase in the thermally induced distortion.

9. Appendix

Material name: [SW]RVC foam 3 percent

Description:

Material Source: Used SolidWorks material

Material Library Name: carbon composite tube

Material Model Type: Linear Elastic Isotropic

Property Name	Value	Units	Value Type
Elastic modulus	4.8263e+007	N/m^2	Constant
Poisson's ratio	0.33	NA	Constant
Shear modulus	3.0337e+007	N/m^2	Constant
Mass density	68	kg/m^3	Constant
Tensile strength	9.6527e+005	N/m^2	Constant
Yield strength	6.8948e+005	N/m^2	Constant
Thermal expansion coefficient	2e-006	/Kelvin	Constant
Thermal conductivity	0.04	W/(m.K)	Constant
Specific heat	1260	J/(kg.K)	Constant

Material name: [SW]acrylic adhesive stiff

Description:

Material Source: Used SolidWorks material

Material Library Name:

Material Model Type: Linear Elastic Isotropic

Property Name	Value	Units	Value Type
Elastic modulus	89632	N/m^2	Constant
Poisson's ratio	0.49	NA	Constant
Shear modulus	30337	N/m^2	Constant

Mass density	1162.6	kg/m^3	Constant
Tensile strength	3.5163e+005	N/m^2	Constant
Yield strength	3.5163e+005	N/m^2	Constant
Thermal expansion coefficient	0.00072	/Kelvin	Constant
Thermal conductivity	0.17	W/(m.K)	Constant
Specific heat	1400	J/(kg.K)	Constant

Material name: [SW]cable mix no adhesive

Description:

Material Source: Used SolidWorks material

Material Library Name: carbon composite tube

Material Model Type: Linear Elastic Isotropic

Property Name	Value	Units	Value Type
Elastic modulus	2.0684e+010	N/m^2	Constant
Poisson's ratio	0.34	NA	Constant
Shear modulus	1.1032e+010	N/m^2	Constant
Mass density	1660.8	kg/m^3	Constant
Tensile strength	8.2392e+008	N/m^2	Constant
Yield strength	4.7367e+008	N/m^2	Constant
Thermal expansion coefficient	1.1e-005	/Kelvin	Constant
Thermal conductivity	0.2	W/(m.K)	Constant
Specific heat	1175	J/(kg.K)	Constant

Material name: [SW]ladder carbon corrected

Description:

Material Source: Used SolidWorks material

Material Library Name: carbon composite tube

Material Model Type: Linear Elastic Isotropic

Property Name	Value	Units	Value Type
Elastic modulus	1.3996e+011	N/m^2	Constant
Poisson's ratio	0.33	NA	Constant
Shear modulus	7.0396e+010	N/m^2	Constant
Mass density	1550.1	kg/m^3	Constant
Tensile strength	1.8961e+009	N/m^2	Constant
Yield strength	1.2273e+009	N/m^2	Constant
Thermal expansion coefficient	1e-006	/Kelvin	Constant
Thermal conductivity	46	W/(m.K)	Constant
Specific heat	920	J/(kg.K)	Constant

Material name: [SW]silicon D

Description:

Material Source: Used SolidWorks material

Material Library Name: carbon composite tube

Material Model Type: Linear Elastic Isotropic

Property Name	Value	Units	Value Type
Elastic modulus	1.1032e+011	N/m^2	Constant
Poisson's ratio	0.28	NA	Constant
Shear modulus	4.8953e+010	N/m^2	Constant
Mass density	2325.1	kg/m^3	Constant
Tensile strength	1.1997e+008	N/m^2	Constant
Yield strength	1.1997e+008	N/m^2	Constant
Thermal expansion coefficient	3e-006	/Kelvin	Constant
Thermal conductivity	124	W/(m.K)	Constant
Specific heat	700	J/(kg.K)	Constant