Stress analysis of hinge L AA 2

1. Introduction
2. Description
3. File Information
4. Materials
5. Load & Restraint Information
6. Study Property
7. Contact
8. Results
    a. Default Results
9. Appendix

---

1. Introduction

analysis hinge AA under extraction load.

added side web for 3 point support

Note:

Do not base your design decisions solely on the data presented in this report. Use this information in conjunction with experimental data and practical experience. Field testing is mandatory to validate your final design. COSMOSWorks helps you reduce your time-to-market by reducing but not eliminating field tests.

---

2. Description

Just at point of withdrawal. Total 15 lb on the top engagement anchor. The projected deformation (at 50 cm z) in this case is 2 mm dip and larger side motion. The stress exceeds failure.

---

3. File Information

Model name:	hinge L AA
Model location:	C:\Documents and Settings\Howard Wieman\My Documents\aps project\mechanical\HFT Alice July 2007 restore\HFT Alice July 2007\hinge L AA.SLDASM
Results location:	C:\Program Files\SolidWorks\COSMOS\work
Study name:	hinge AA 2 (-Default-)

---

4. Materials

No.	Part Name	Material	Mass	Volume
1	hinge back plate AA-1	[SW]6061 Alloy	0.143074 kg	5.29902e-005 m^3
2	hinge front plate L AA-1	[SW]6061 Alloy	0.162628 kg	6.02327e-005 m^3
3	hinge side plate AA-1	[SW]6061 Alloy	0.0764802 kg	2.8326e-005 m^3
4	hinge side plate AA-2	[SW]6061 Alloy	0.0764802 kg	2.8326e-005 m^3

5. Load & Restraint Information

Restraint	
Restraint-1 <hinge back plate AA-1>	on **2 Face(s)** fixed.
Description:	
Restraint-2 <hinge front plate L AA-1>	on **1 Face(s)** with respect to reference geometry **Right** with displacement **0 m** normal to reference plane
Description:	
Pin Connector-1 <hinge side plate AA-1, hinge back plate AA-1>	Pin Connectors on **2 Face(s)**; no pin translation; with rotational stiffness of 0.00000 N-m/rad
Description:	
Pin Connector-2 <hinge side plate AA-1, hinge front plate L AA-1>	Pin Connectors on **2 Face(s)**; no pin translation; with rotational stiffness of 0.00000 N-m/rad
Description:	
Pin Connector-3 <hinge side plate AA-2, hinge back plate AA-1>	Pin Connectors on **2 Face(s)**; no pin translation; with rotational stiffness of 0.00000 N-m/rad
Description:	
Pin Connector-4 <hinge side plate AA-2, hinge front plate L AA-1>	Pin Connectors on **2 Face(s)**; no pin translation; with rotational stiffness of 0.00000 N-m/rad
Description:	
Pin Connector-5 <hinge side plate AA-2, hinge back plate AA-1>	Pin Connectors on **2 Face(s)**; no pin translation; with rotational stiffness of 0.00000 N-m/rad
Description:	

Pin Connector-6 <hinge side plate AA-2, hinge front plate L AA-1>	Pin Connectors on **2 Face(s)**; no pin translation; with rotational stiffness of 0.00000 N-m/rad
Description:	
Pin Connector-7 <hinge side plate AA-1, hinge back plate AA-1>	Pin Connectors on **2 Face(s)**; no pin translation; with rotational stiffness of 0.00000 N-m/rad
Description:	
Pin Connector-8 <hinge side plate AA-1, hinge front plate L AA-1>	Pin Connectors on **2 Face(s)**; no pin translation; with rotational stiffness of 0.00000 N-m/rad
Description:	

Load	
RemoteLoads/Mass-9 <hinge front plate L AA-1>	Load (Rigid Connection) on **8 Face(s)** apply force **15 lb** along Z direction at location (-12 cm, 10 cm, 40 cm)
Description:	

---

6. Study Property

Mesh Information	
Mesh Type:	Solid mesh
Mesher Used:	Standard
Automatic Transition:	Off
Smooth Surface:	On
Jacobian Check:	4 Points
Element Size:	0.21723 in
Tolerance:	0.010862 in
Quality:	High
Number of elements:	28014

Number of nodes:	56894
Time to complete mesh(hh;mm;ss):	00:00:17
Computer name:	WIEMAN-M90

Solver Information	
Quality:	High
Solver Type:	Direct sparse solver
Option:	Include Thermal Effects
Thermal Option:	Input Temperature
Thermal Option:	Reference Temperature at zero strain: 298 Kelvin

---

7. Contact

Contact state: Touching faces - Bonded

---

8. Results

8a. Default Results

Name	Type	Min	Location	Max	Location
Stress1	VON: von Mises stress	1.25086e-006 N/m^2 Node: 26726	(-2.94529 in, 0.305527 in, 6.05988 in)	6.05951e+007 N/m^2 Node: 12329	(-1.29165 in, -3.76044 in, -1.58 in)
Displacement1	URES: Resultant displacement	0 m Node: 1	(0.9375 in, -3.79 in, -0.29 in)	0.000272732 m Node: 26337	(-3.61897 in, 2.67385 in, 6.25988 in)
Strain1	ESTRN: Equivalent strain	2.01232e-017 Element: 12039	(-3.16197 in, -0.727813 in, 6.15988 in)	0.00047593 Element: 500	(-1.28333 in, -3.74809 in, -1.53062 in)
Displacement2	UZ: Z Displacement	-2.94327e-005 m Node: 30759	(-2.67964 in, -4.75 in, 5.52999 in)	0.000201148 m Node: 26348	(-3.59874 in, 2.69547 in, 5.40988 in)

hinge L AA-hinge AA 2-Stress-Stress1
JPEG

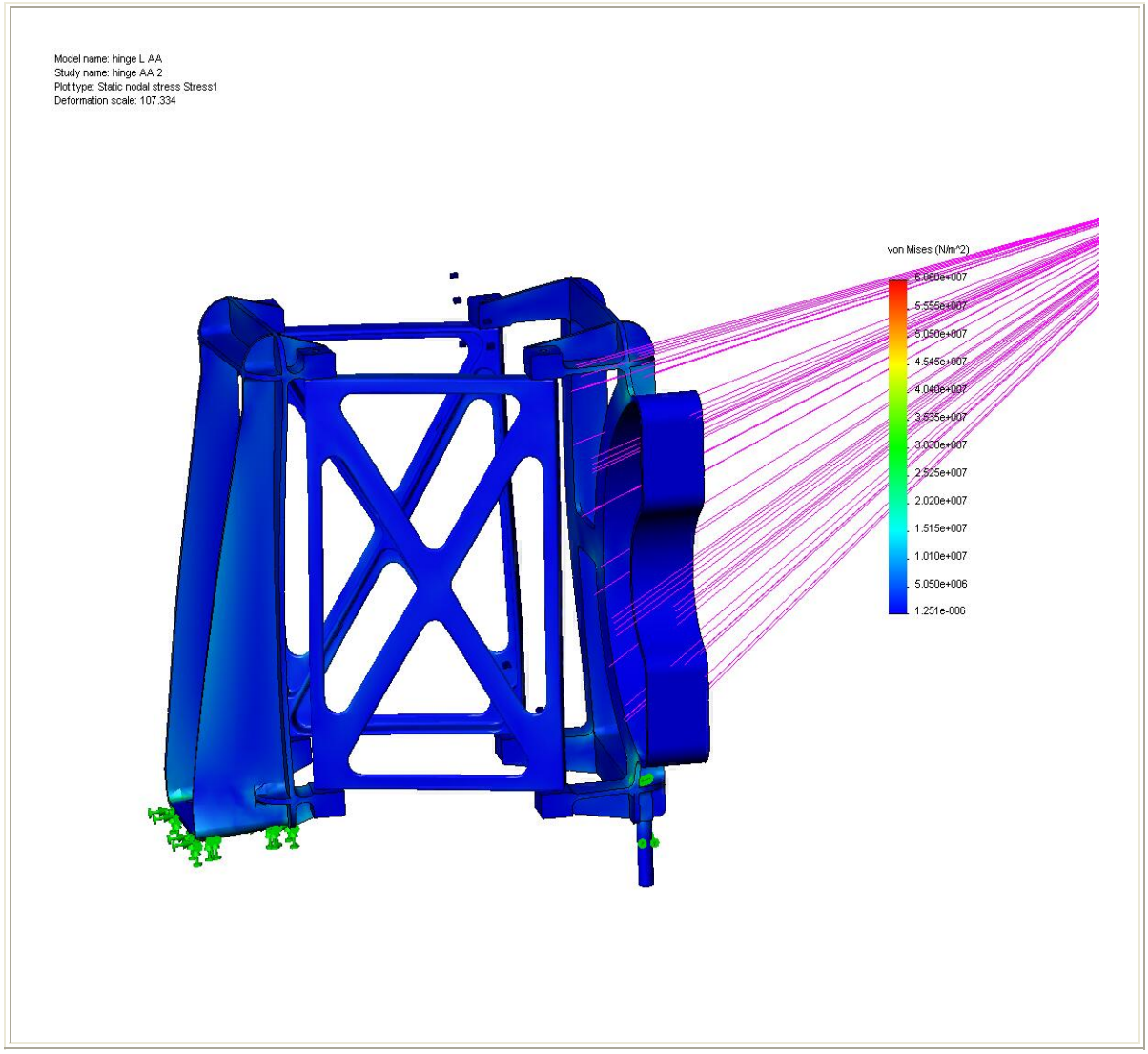

hinge L AA-hinge AA 2-Displacement-Displacement1

JPEG

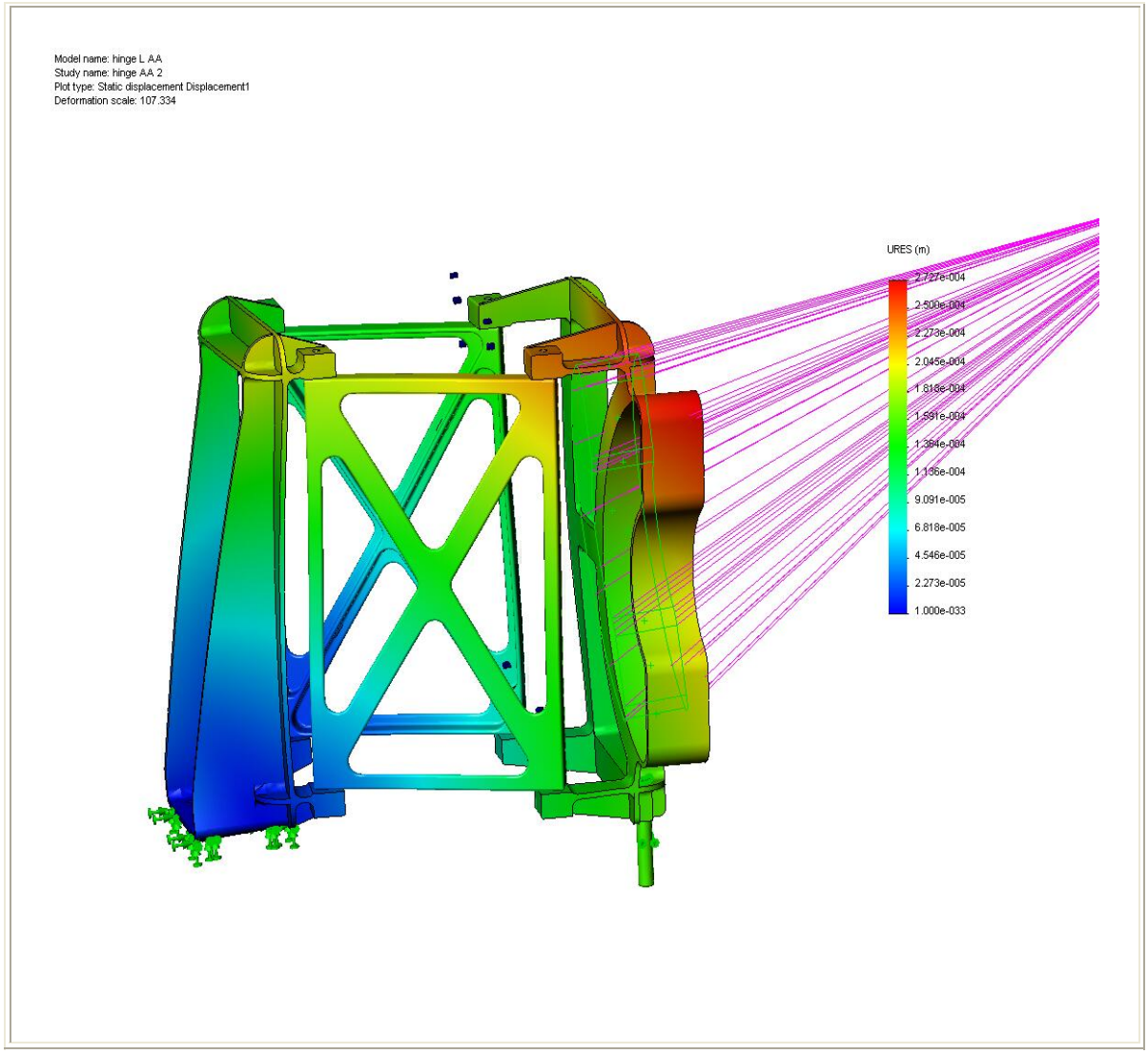

hinge L AA-hinge AA 2-Strain-Strain1

JPEG

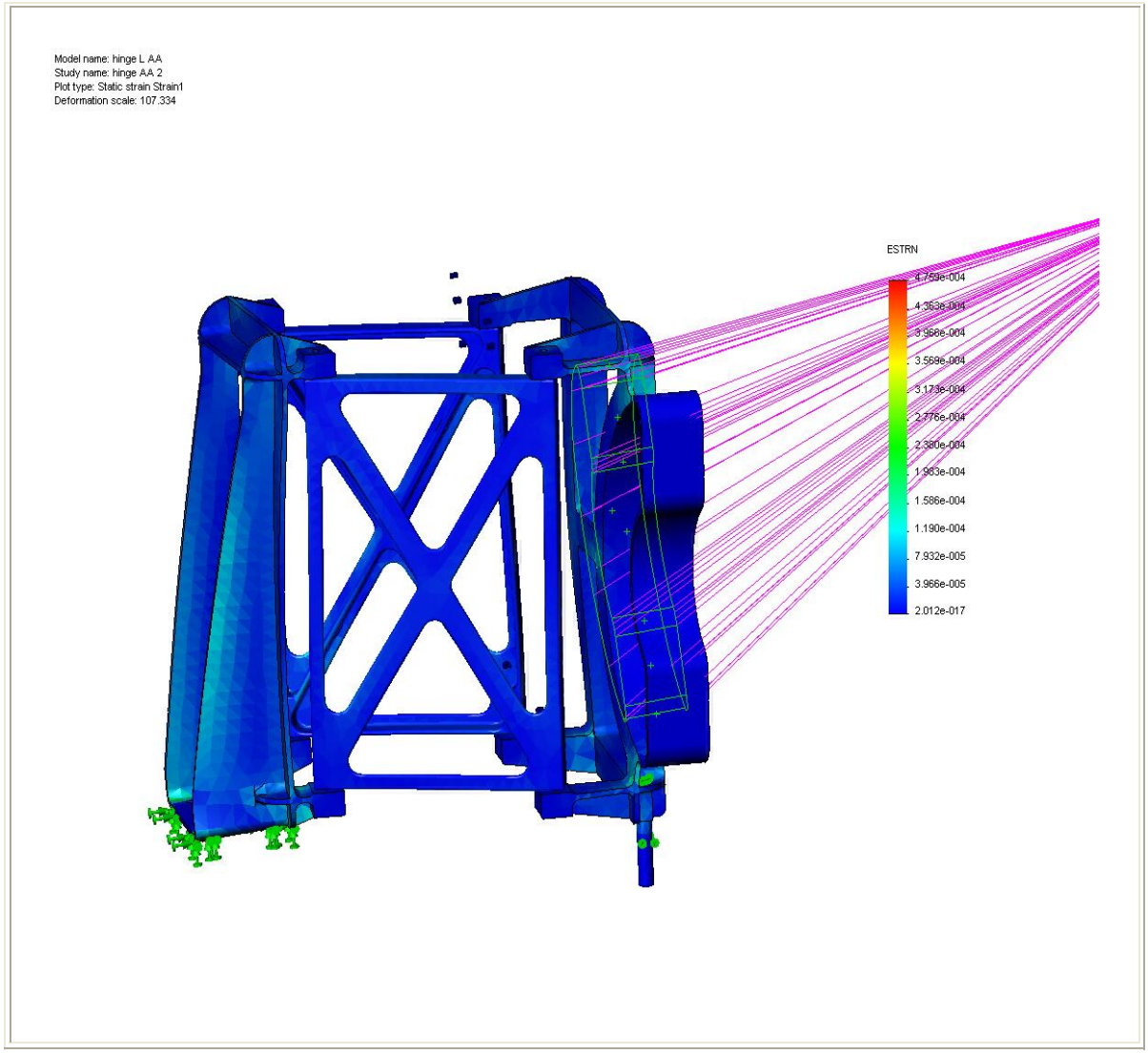

hinge L AA-hinge AA 2-Displacement-Displacement2

JPEG

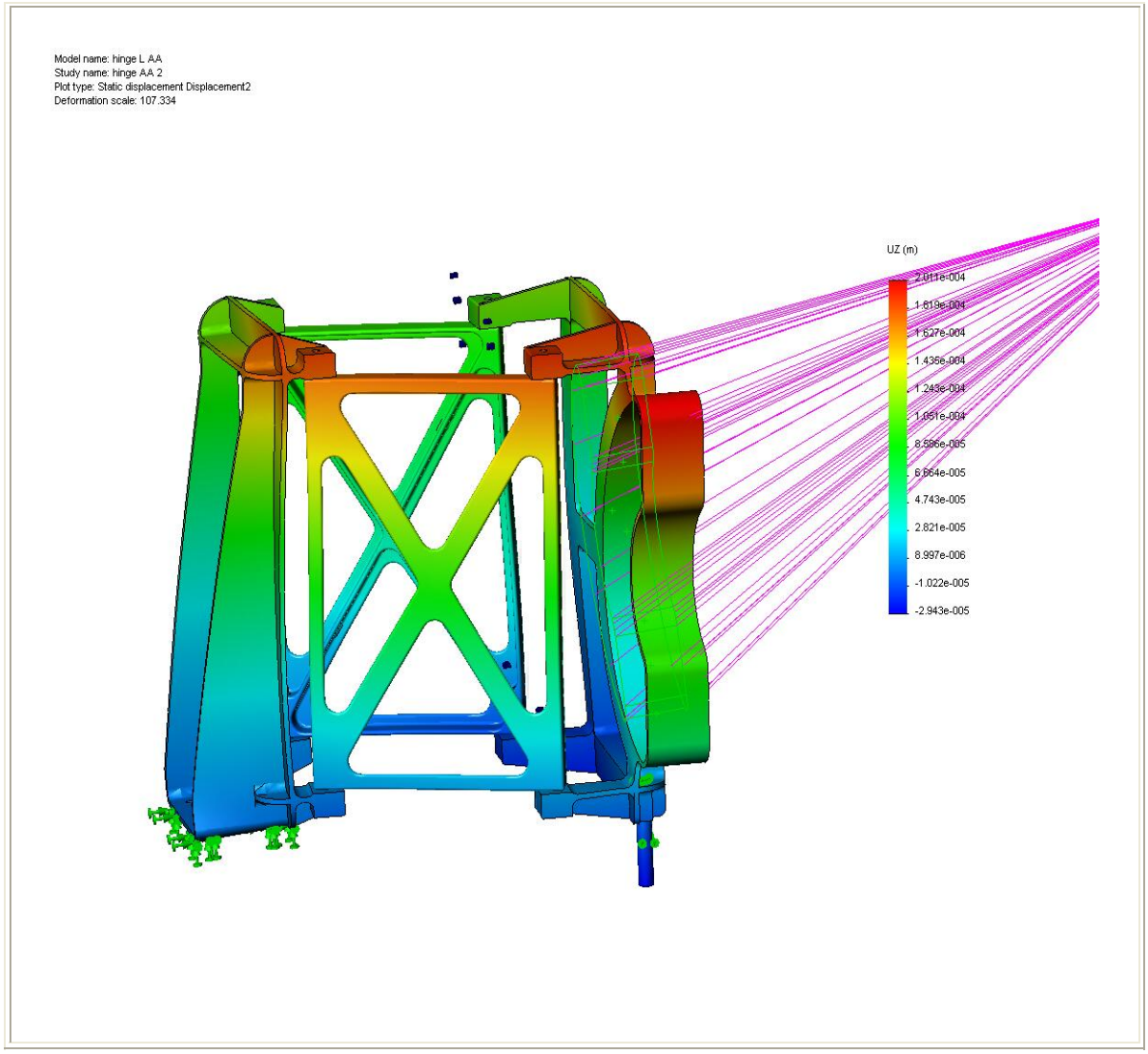

9. Appendix

Material name: [SW]6061 Alloy

Description:

Material Source: Used SolidWorks material

Material Library Name: SolidWorks Materials

Material Model Type: Linear Elastic Isotropic

Property Name	Value	Units	Value Type
Elastic modulus	6.9e+010	N/m^2	Constant
Poisson's ratio	0.33	NA	Constant
Shear modulus	2.6e+010	N/m^2	Constant
Mass density	2700	kg/m^3	Constant
Tensile strength	1.2408e+008	N/m^2	Constant
Yield strength	5.5149e+007	N/m^2	Constant
Thermal expansion coefficient	2.4e-005	/Kelvin	Constant
Thermal conductivity	170	W/(m.K)	Constant
Specific heat	1300	J/(kg.K)	Constant