Stress analysis of hinge L AA

Date: 13-Oct-2007

1. Introduction
2. Description
3. File Information
4. Materials
5. Load & Restraint Information
6. Study Property
7. Contact
8. Results
    a. Default Results
9. Conclusion
10. Appendix

---

1. Introduction

Stress and distortion analysis for hinge structure loads that result from engaging and disengaging the precision mounts.

There are three issues:
1. failure of the aluminum
2. distortion of the structure that causes ladders to collide.
3. distortion of the structure that causes bearing binding.

Note:

Do not base your design decisions solely on the data presented in this report. Use this information in conjunction with experimental data and practical experience. Field testing is mandatory to validate your final design. COSMOSWorks helps you reduce your time-to-market by reducing but not eliminating field tests.

---

2. Description

The assumed load is 15 lbs remotely located in the region of one of the precision mounts. This is a bit of a worse case scenario where a single precision mount engages before the others, plus the insertion and withdrawal force on a mount will probably be less than 15 lbs. This load greatly exceeds gravitational loads which have been neglected in this analysis.

There are two restraints:

1. The base plate on the rear hinge component is full fixed.
2. The cam follower on the front hinge component is restrained laterally.

The distortions must be projected to the end of the ladders and compared to the designed separation of the two detector modules. The designed ladder separation is approximately a mm so the distortion should be limited to significantly less than 1 mm to avoid collisions.

The distortion of the structure determines the tolerance that must be designed into the bearings to avoid binding.

---

3. File Information

Model name:	hinge L AA

Model location:	C:\Documents and Settings\Howard Wieman\My Documents\aps project\mechanical\HFT Alice July 2007 restore\HFT Alice July 2007\hinge L AA.SLDASM
Results location:	C:\Program Files\SolidWorks\COSMOS\work
Study name:	hinge AB 4 (-Default-)

---

4. Materials

No.	Part Name	Material	Mass	Volume
1	hinge back plate AA-1	[SW]6061 Alloy	0.406954 kg	0.000150724 m^3
2	hinge front plate L AA-1	[SW]6061 Alloy	0.211041 kg	7.81633e-005 m^3
3	hinge side plate AA-1	[SW]6061 Alloy	0.11827 kg	4.38035e-005 m^3
4	hinge side plate AA-2	[SW]6061 Alloy	0.11827 kg	4.38035e-005 m^3

---

5. Load & Restraint Information

Restraint	
Restraint-1 <hinge back plate AA-1>	on **2 Face(s)** fixed.
Description:	
Restraint-2 <hinge front plate L AA-1>	on **1 Face(s)** with respect to reference geometry **Right** with displacement **0 m** normal to reference plane

Description:	
Pin Connector-10 <hinge side plate AA-1, hinge front plate L AA-1>	Pin Connectors on **2 Face(s)**; no pin translation; with rotational stiffness of 0.00000 N-m/rad
Description:	
Pin Connector-11 <hinge side plate AA-1, hinge back plate AA-1>	Pin Connectors on **2 Face(s)**; no pin translation; with rotational stiffness of 0.00000 N-m/rad
Description:	
Pin Connector-12 <hinge side plate AA-2, hinge back plate AA-1>	Pin Connectors on **2 Face(s)**; no pin translation; with rotational stiffness of 0.00000 N-m/rad
Description:	
Pin Connector-13 <hinge side plate AA-2, hinge front plate L AA-1>	Pin Connectors on **2 Face(s)**; no pin translation; with rotational stiffness of 0.00000 N-m/rad
Description:	
Pin Connector-14 <hinge side plate AA-2, hinge front plate L AA-1>	Pin Connectors on **2 Face(s)**; no pin translation; with rotational stiffness of 0.00000 N-m/rad
Description:	
Pin Connector-15 <hinge side plate AA-1, hinge front plate L AA-1>	Pin Connectors on **2 Face(s)**; no pin translation; with rotational stiffness of 0.00000 N-m/rad
Description:	
Pin Connector-16 <hinge side plate AA-1, hinge back plate AA-1>	Pin Connectors on **2 Face(s)**; no pin translation; with rotational stiffness of 0.00000 N-m/rad
Description:	
Pin Connector-17 <hinge side plate AA-2, hinge back plate AA-1>	Pin Connectors on **2 Face(s)**; no pin translation; with rotational stiffness of 0.00000 N-m/rad
Description:	

Load	
RemoteLoads/Mass-1 <hinge front plate L AA-1>	Load (Rigid Connection) on **8 Face(s)** apply force **15 lb** along Z direction at location (-3.8 in, 3.4 in, 14.9 in)
Description:	

---

6. Study Property

Mesh Information	
Mesh Type:	Solid mesh
Mesher Used:	Standard
Automatic Transition:	Off
Smooth Surface:	On
Jacobian Check:	4 Points
Element Size:	0.26768 in
Tolerance:	0.013384 in
Quality:	High
Number of elements:	31122
Number of nodes:	61597
Time to complete mesh(hh;mm;ss):	00:00:18
Computer name:	WIEMAN-M90

Solver Information	
Quality:	High
Solver Type:	Direct sparse solver
Option:	Include Thermal Effects
Thermal Option:	Input Temperature
Thermal Option:	Reference Temperature at zero strain: 298 Kelvin

7. Contact

Contact state: Touching faces - Bonded

8. Results

8a. Default Results

Name	Type	Min	Location	Max	Location
Stress1	VON: von Mises stress	1.84245e-007 N/m^2 Node: 20627	(-2.68221 in, 0.26471 in, 6.07381 in)	1.00101e+007 N/m^2 Node: 15893	(-2 in, -3.41563 in, -0.08 in)
Displacement1	URES: Resultant displacement	0 m Node: 1	(-2.45 in, -3.43125 in, -2.6795 in)	2.52034e-005 m Node: 27119	(-3.34347 in, 2.73357 in, 6.32381 in)
Strain1	ESTRN:	1.80672e-	(-2.68402	6.45584e-005	(-

	Equivalent strain	018 Element: 13359	in, 0.177115 in, 5.17798 in)	Element: 5753	2.02999 in, -3.40989 in, -0.173294 in)
Displacement2	UX: X Displacement	-0.00608408 mm Node: 4530	(-1.70275 in, 3.0425 in, -0.73625 in)	0.006537 mm Node: 30991	(-3.12115 in, 2.80328 in, 6.32381 in)
Displacement3	UY: Y Displacement	-0.0162355 mm Node: 19843	(-1.01561 in, 3.44902e-015 in, 6.32381 in)	0.00183205 mm Node: 5828	(-0.654762 in, -3.11 in, -3.08 in)
Displacement4	UZ: Z Displacement	-0.00412644 mm Node: 19629	(-2.37036 in, -4.4 in, 5.2137 in)	0.0204604 mm Node: 26143	(-3.35355 in, 3.25355 in, 5.15381 in)

hinge L AA-hinge AB 4-Stress-Stress1
JPEG

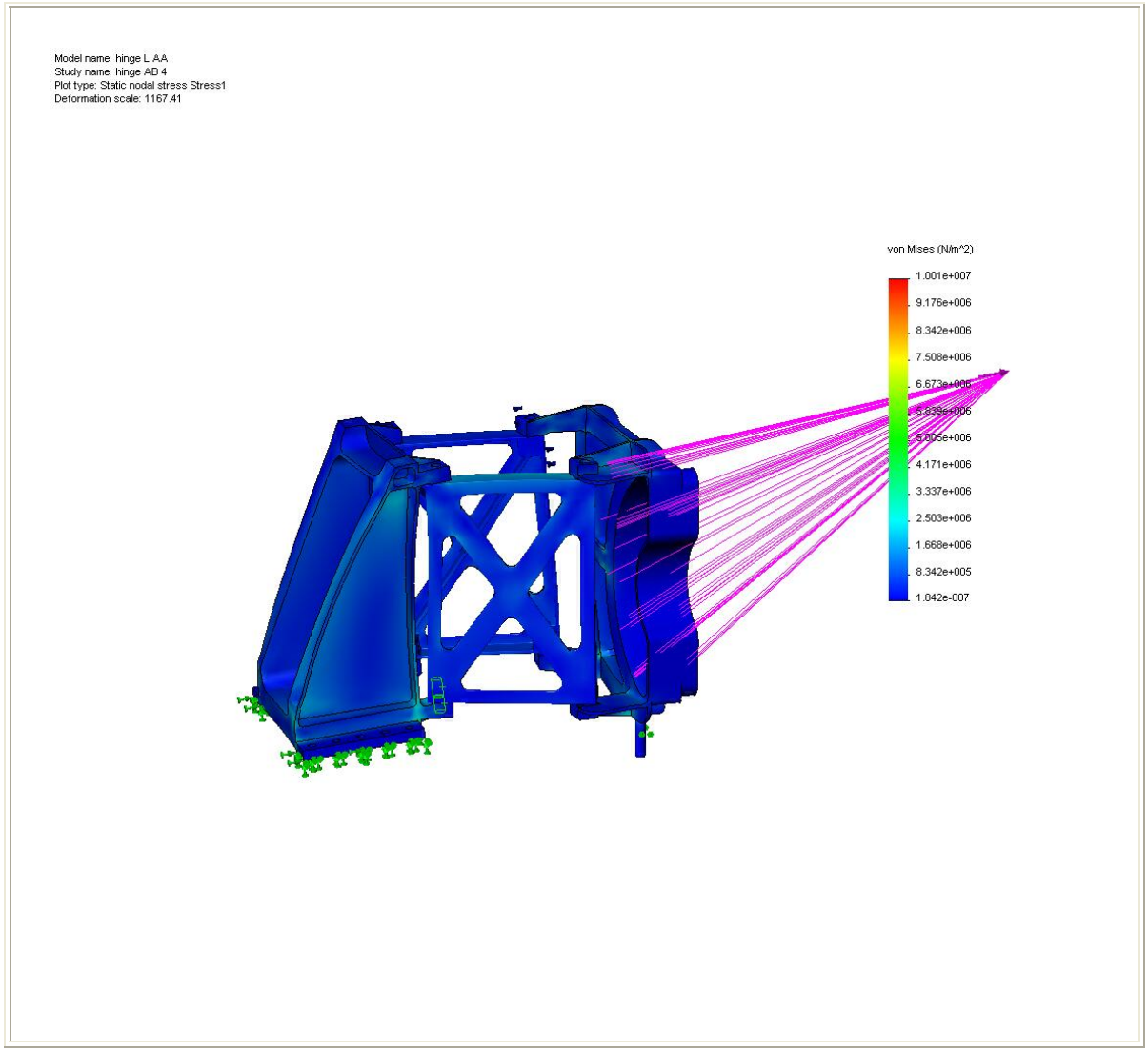

hinge L AA-hinge AB 4-Displacement-Displacement1

JPEG

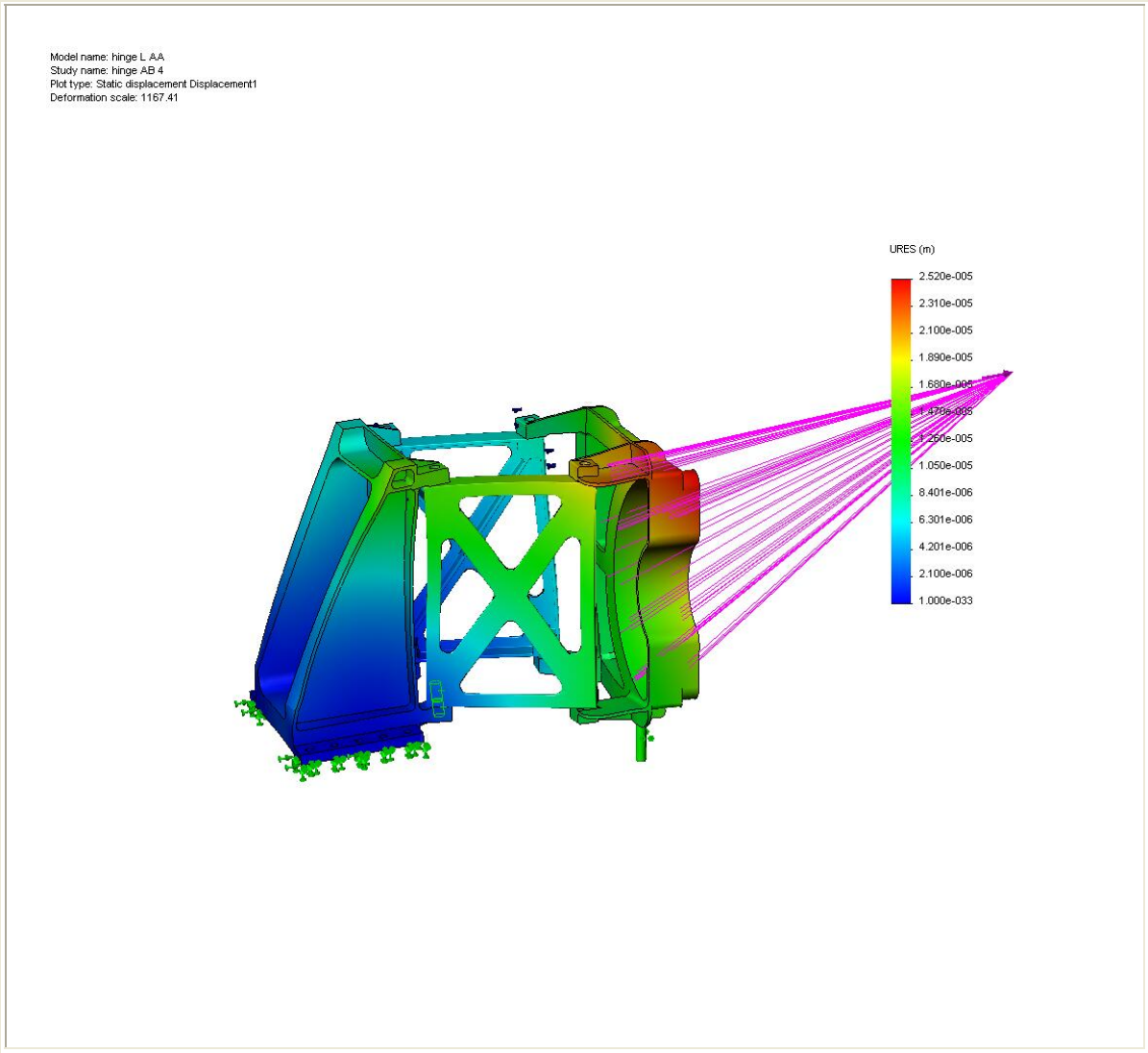

hinge L AA-hinge AB 4-Strain-Strain1

JPEG

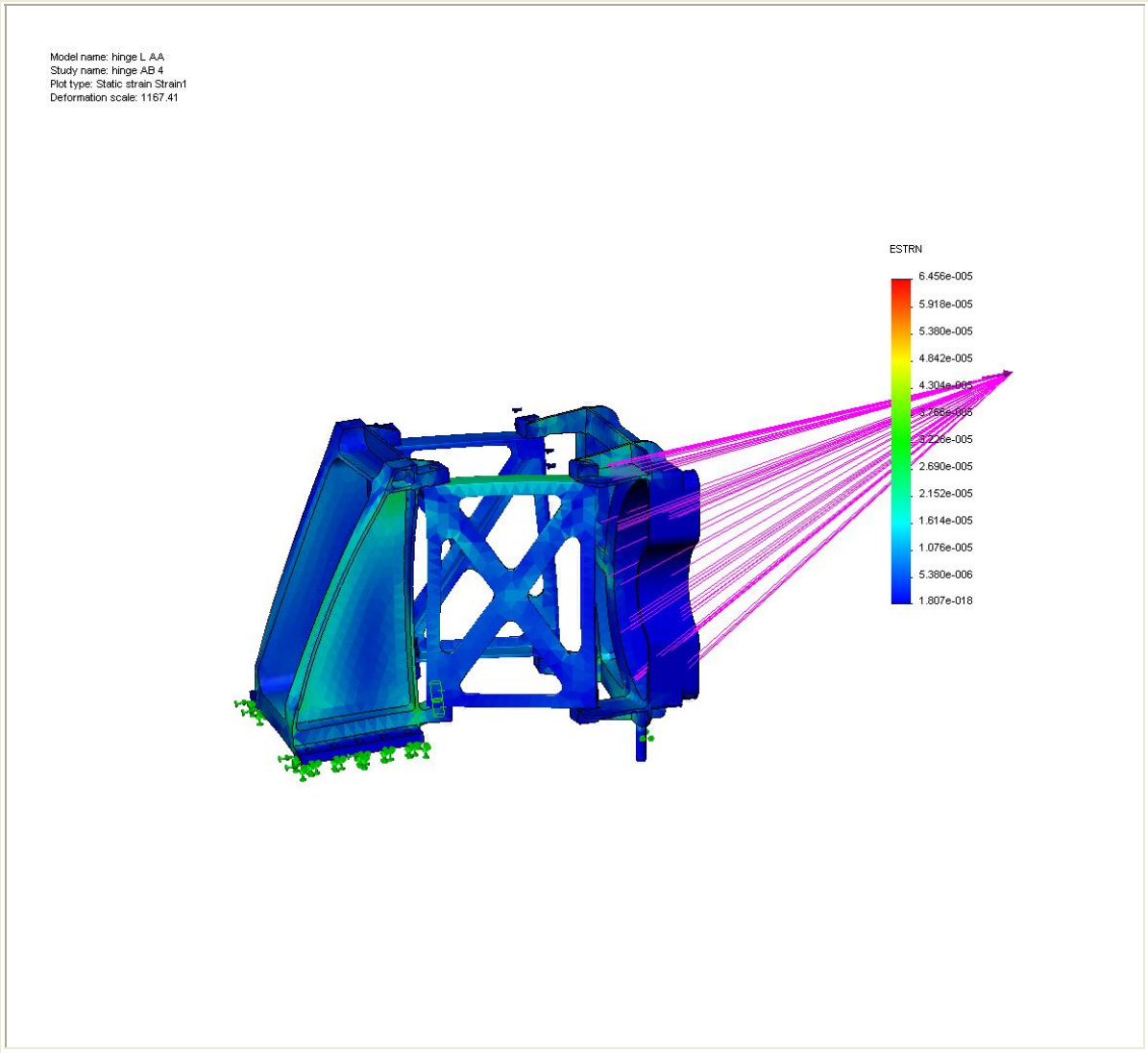

hinge L AA-hinge AB 4-Displacement-Displacement2

JPEG

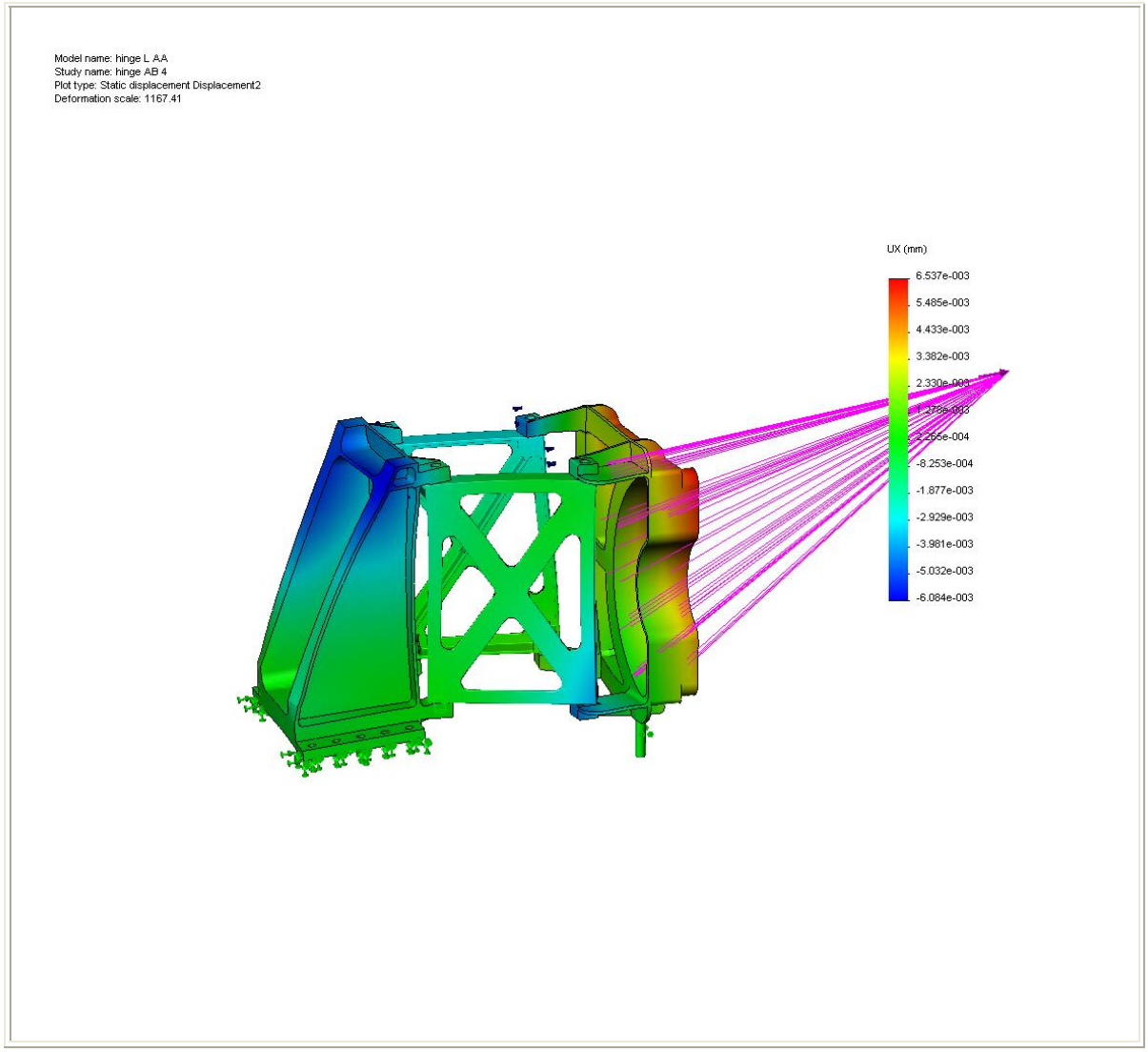

hinge L AA-hinge AB 4-Displacement-Displacement3

JPEG

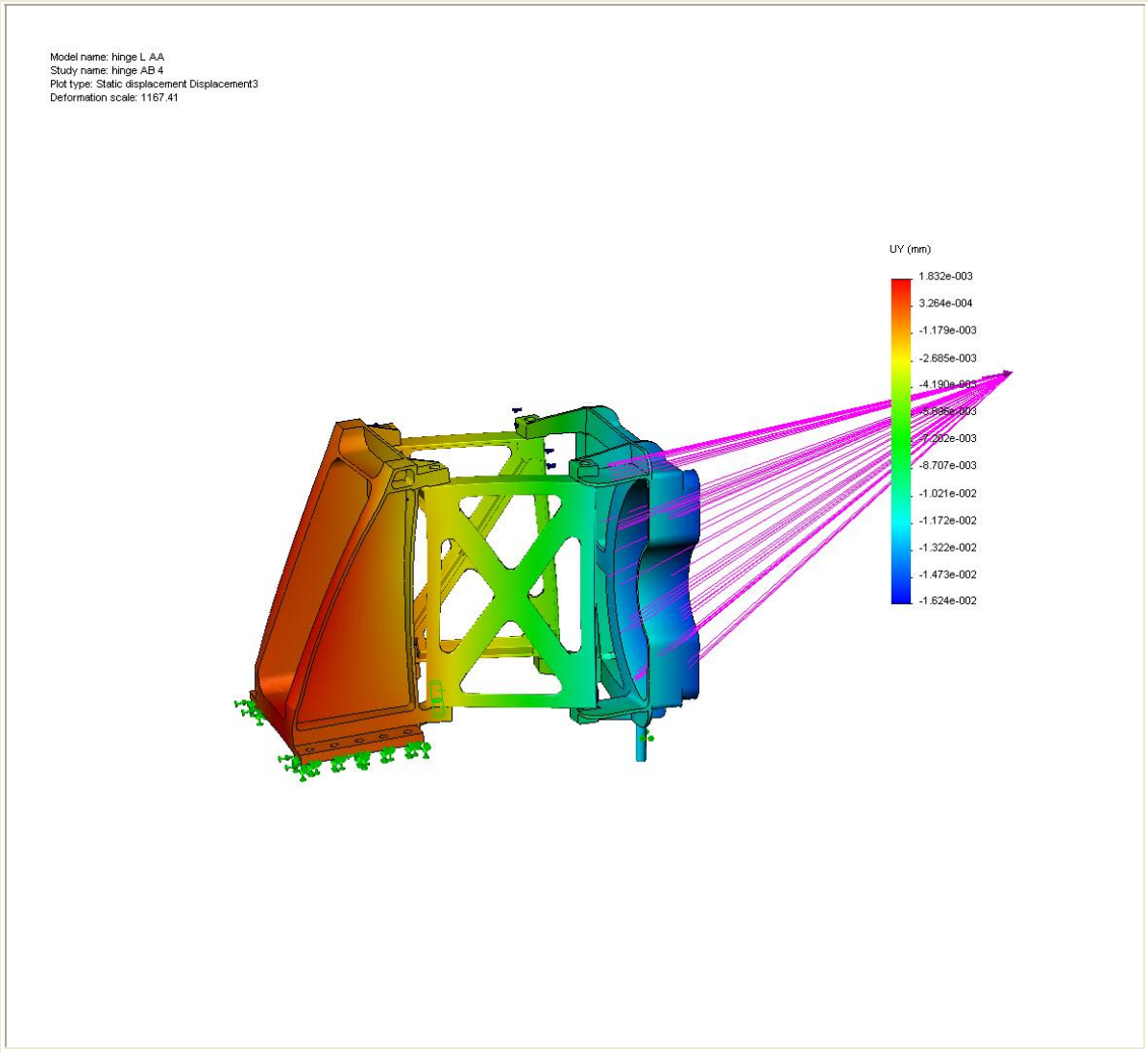

hinge L AA-hinge AB 4-Displacement-Displacement4

JPEG

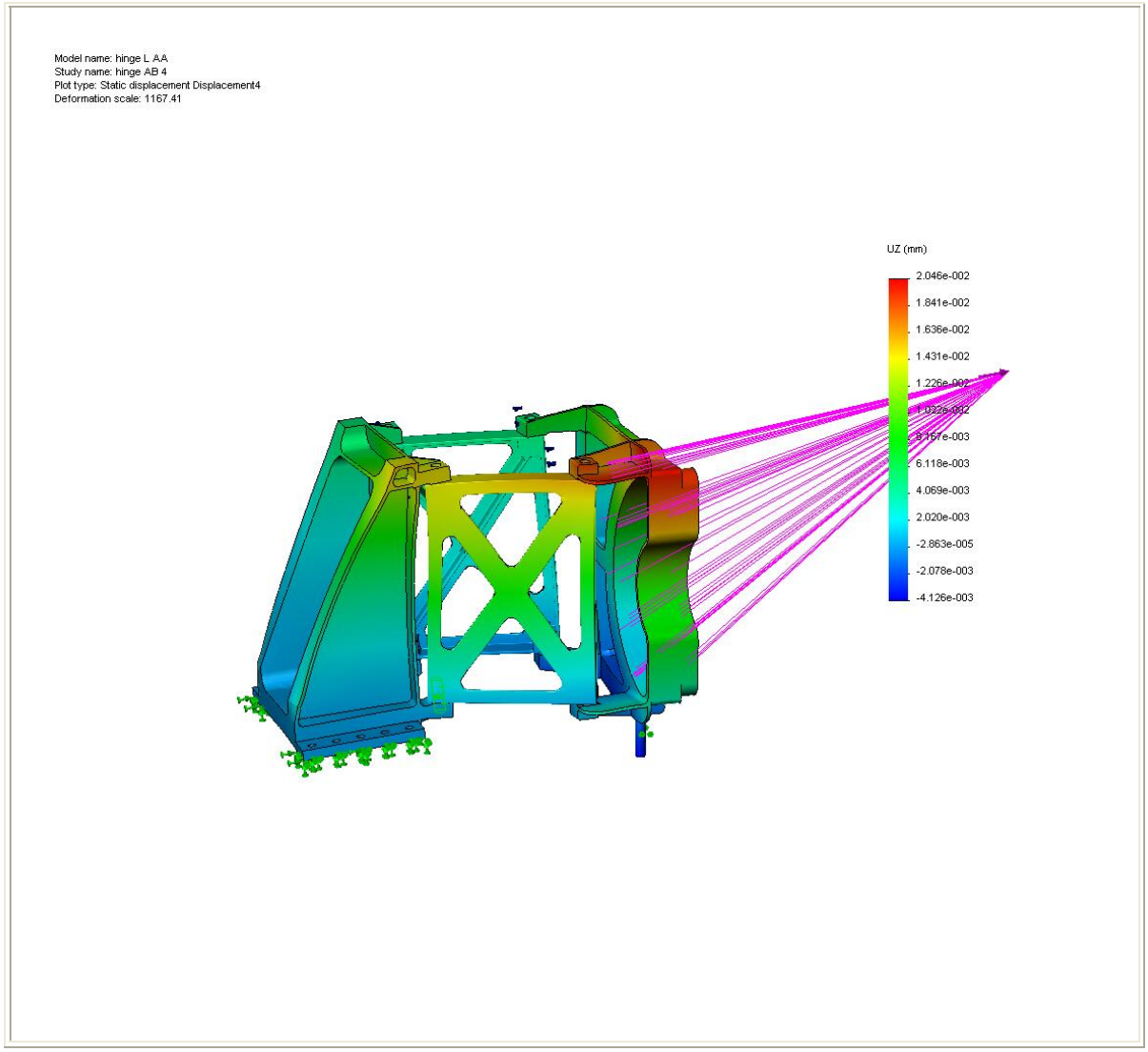

9. Conclusion

The hinge structure has evolved into a tank (it weighs 1.9 lbs), but it should meet the strength requirements.

1. The maximum observed stress in the structure is 1.0 N/m^2 which is a factor of 5.5

less than the aluminum yield stress.

2. The projected ladder tip motion is 5 microns in x
and 100 microns in y. This should not cause collisions since it is well below than the 1 mm ladder separation.

3. The structure only twists out of nominal position by at most 10 microns so it is not expected that binding will occur, but this can be looked at in more detail.

---

10. Appendix

Material name: [SW]6061 Alloy

Description:

Material Source: Used SolidWorks material

Material Library Name: SolidWorks Materials

Material Model Type: Linear Elastic Isotropic

Property Name	Value	Units	Value Type
Elastic modulus	6.9e+010	N/m^2	Constant
Poisson's ratio	0.33	NA	Constant
Shear modulus	2.6e+010	N/m^2	Constant
Mass density	2700	kg/m^3	Constant
Tensile strength	1.2408e+008	N/m^2	Constant
Yield strength	5.5149e+007	N/m^2	Constant
Thermal expansion coefficient	2.4e-005	/Kelvin	Constant
Thermal conductivity	170	W/(m.K)	Constant
Specific heat	1300	J/(kg.K)	Constant