Sector ladder thermal deformation preliminary

1. Introduction
2. Description
3. File Information
4. Materials
5. Load & Restraint Information
6. Study Property
7. Contact
8. Results
    a. Default Results
9. Conclusion
10. Appendix

---

1. Introduction

Thermally induced mechanical distortion.
Multi-layer ladder and sector beam.

---

2. Description

Preliminary check of thermal distortion with a ladder composed of multiple layers:

1. silicon, not divided into chips, solid mesh
2. acrylic adhesive, solid mesh

3. kapton/aluminum cable, solid mesh
4. acrylic adhesive, solid mesh
5. carbon composite ladder backing, solid mesh
6. carbon composite ALICE style sector beam, shell mesh

This is a first pass using an isotropic material for the carbon composite.

The temperature change is 20 deg C

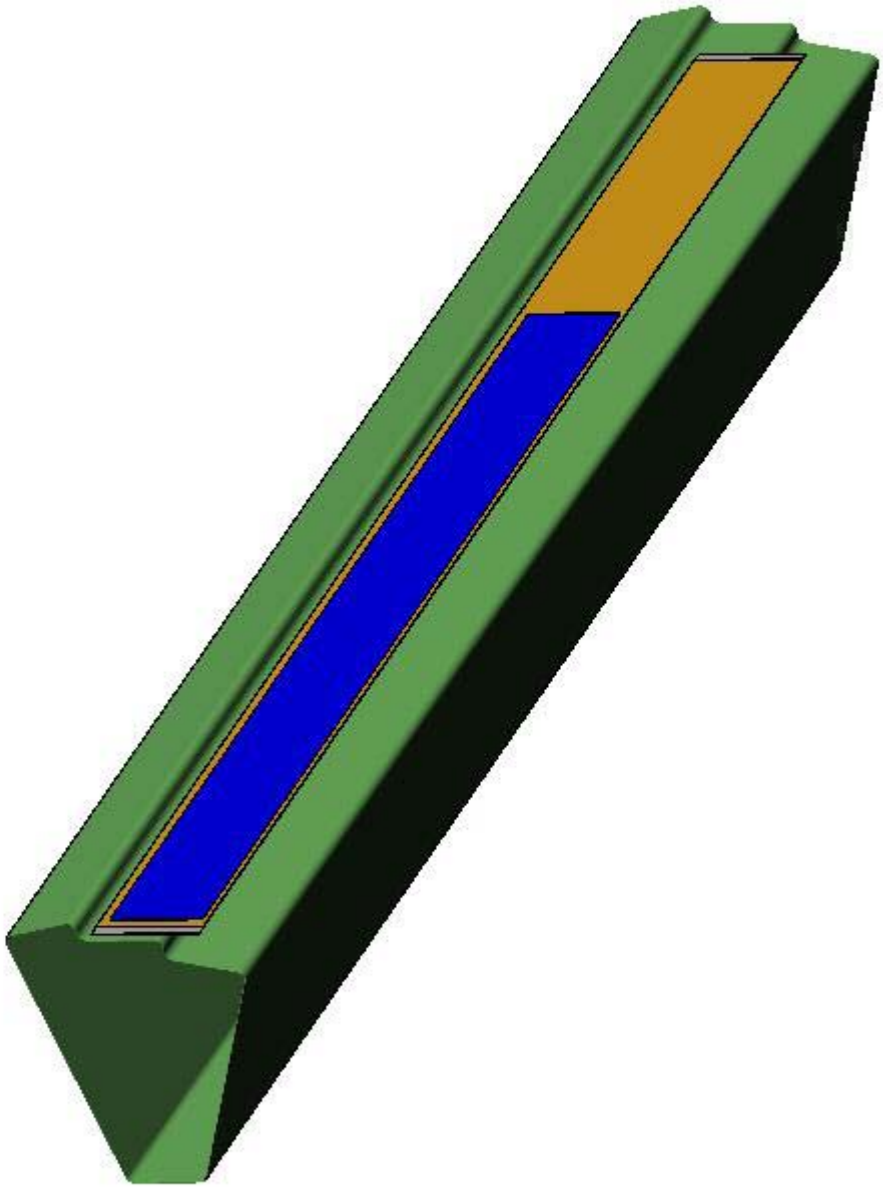

3. File Information

Model name:	sector and middle ladder
Model location:	C:\Documents and Settings\Howard Wieman\My Documents\aps project\mechanical\ladder thermal thin 3\sector and middle ladder.SLDASM
Results location:	C:\Program Files\SolidWorks\COSMOS\work
Study name:	thermal change uniform 2 (-Default-)

4. Materials

No.	Part Name	Material	Mass	Volume
1	beam-1	[SW]ladder carbon corrected	0.00921069 kg	5.94209e-006 m^3
2	ladder C-1/A carbon ladder floor-1	[SW]ladder carbon corrected	0.000552112 kg	7.88731e-007 m^3
3	ladder C-1/Silicon Ladder-1	[SW]silicon D	0.000419683 kg	1.805e-007 m^3
4	ladder C-1/acrylic cable to carbon c-2	[SW]acrylic adhesive	0.000353116 kg	3.03741e-007 m^3
5	ladder C-1/acrylic silicon to cable c-1	[SW]acrylic adhesive	0.000213199 kg	1.83388e-007 m^3

6	ladder C-1/cable c-1	[SW]cable mix no adhesive	0.00136202 kg	8.20102e-007 m^3
7		[SW]ladder carbon corrected	0 kg	0 m^3

---

5. Load & Restraint Information

Restraint	
Restraint-4 <beam-1>	on **2 Edge(s)** fixed.
Description:	

Load	
Temperature-1 <beam-1, ladder C-1/Silicon Ladder-1, ladder C-1/cable c-1, ladder C-1/A carbon ladder floor-1, ladder C-1/acrylic cable to carbon c-2, ladder C-1/acrylic silicon to cable c-1>	on **6 Component(s)** with temperature **320 Kelvin**
Description:	

---

6. Study Property

Mesh Information	
Mesh Type:	Mesh
Mesher Used:	Standard

Automatic Transition:	Off
Smooth Surface:	On
Jacobian Check:	4 Points
Element Size:	0.20188 cm
Tolerance:	0.010094 cm
Quality:	High
Number of elements:	60336
Number of nodes:	104851
Time to complete mesh(hh;mm;ss):	00:00:45
Computer name:	WIEMAN-M90

Solver Information	
Quality:	High
Solver Type:	Direct sparse solver
Option:	Include Thermal Effects
Thermal Option:	Input Temperature
Thermal Option:	Reference Temperature at zero strain: 300 Kelvin

---

7. Contact

Contact state: Touching faces - Bonded

Contact Set-1	Bonded contact pair: Between selected faces of **beam-1** and **ladder C-1/A carbon ladder floor-1**
Description:	

Contact Set-2	Bonded contact pair: Between selected faces of **ladder C-1/A carbon ladder floor-1** and **ladder C-1/acrylic cable to carbon c-2**
Description:	
Contact Set-3	Bonded contact pair: Between selected faces of **ladder C-1/acrylic cable to carbon c-2** and **ladder C-1/cable c-1**
Description:	
Contact Set-4	Bonded contact pair: Between selected faces of **ladder C-1/cable c-1** and **ladder C-1/acrylic silicon to cable c-1**
Description:	
Contact Set-5	Bonded contact pair: Between selected faces of **ladder C-1/acrylic silicon to cable c-1** and **ladder C-1/Silicon Ladder-1**
Description:	

---

8. Results

8a. Default Results

Name	Type	Min	Location	Max	Location
Stress1	VON: von Mises stress	0.0794935 psi Node: 40271	(2.81761 cm, 7.77052 cm, -1.322 cm)	3242.92 psi Node: 65731	(2.92185 cm, 7.73228 cm, -10.6 cm)
Displacement1	URES: Resultant displacement	0 m Node: 59561	(0.650443 cm, 2.52679 cm, -10.6 cm)	6.9176e-005 m Node: 49	(3.76013 cm, 7.70106 cm, 17.978

					cm)
Displacement2	UY: Y Displacement	-6.166e-005 m Node: 25	(3.76061 cm, 7.71405 cm, 17.978 cm)	3.50844e-005 m Node: 21130	(2.50145 cm, 7.78984 cm, 2.678 cm)
Displacement3	UZ: Z Displacement	-1.78854e-006 m Node: 45510	(3.76131 cm, 7.73284 cm, -9.4 cm)	1.46816e-005 m Node: 45647	(3.76131 cm, 7.73284 cm, 17.778 cm)

sector and middle ladder-thermal change uniform 2-Stress-Stress1
JPEG

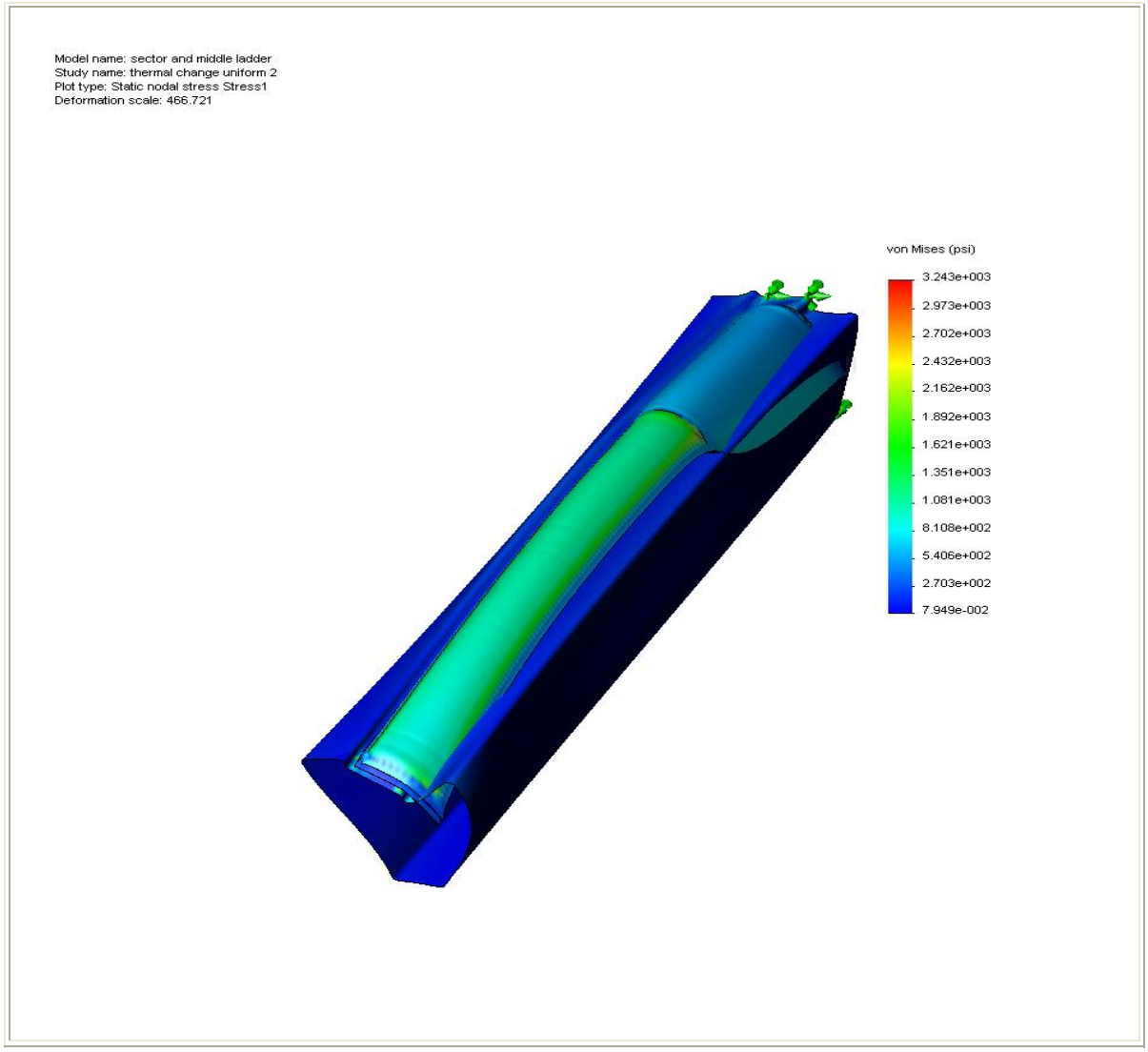

sector and middle ladder-thermal change uniform 2-Displacement-Displacement1

JPEG

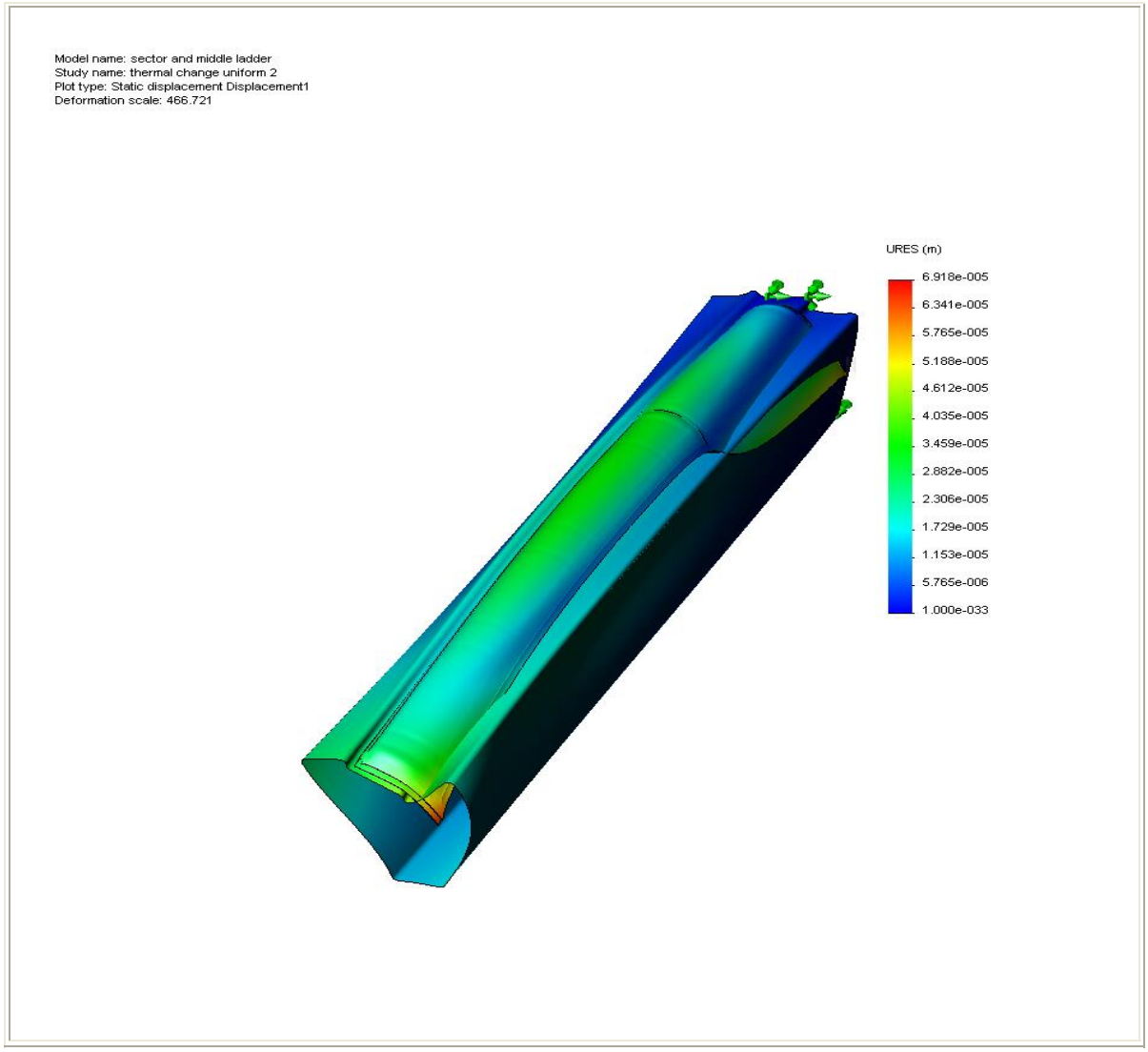

sector and middle ladder-thermal change uniform 2-Displacement-Displacement2

JPEG

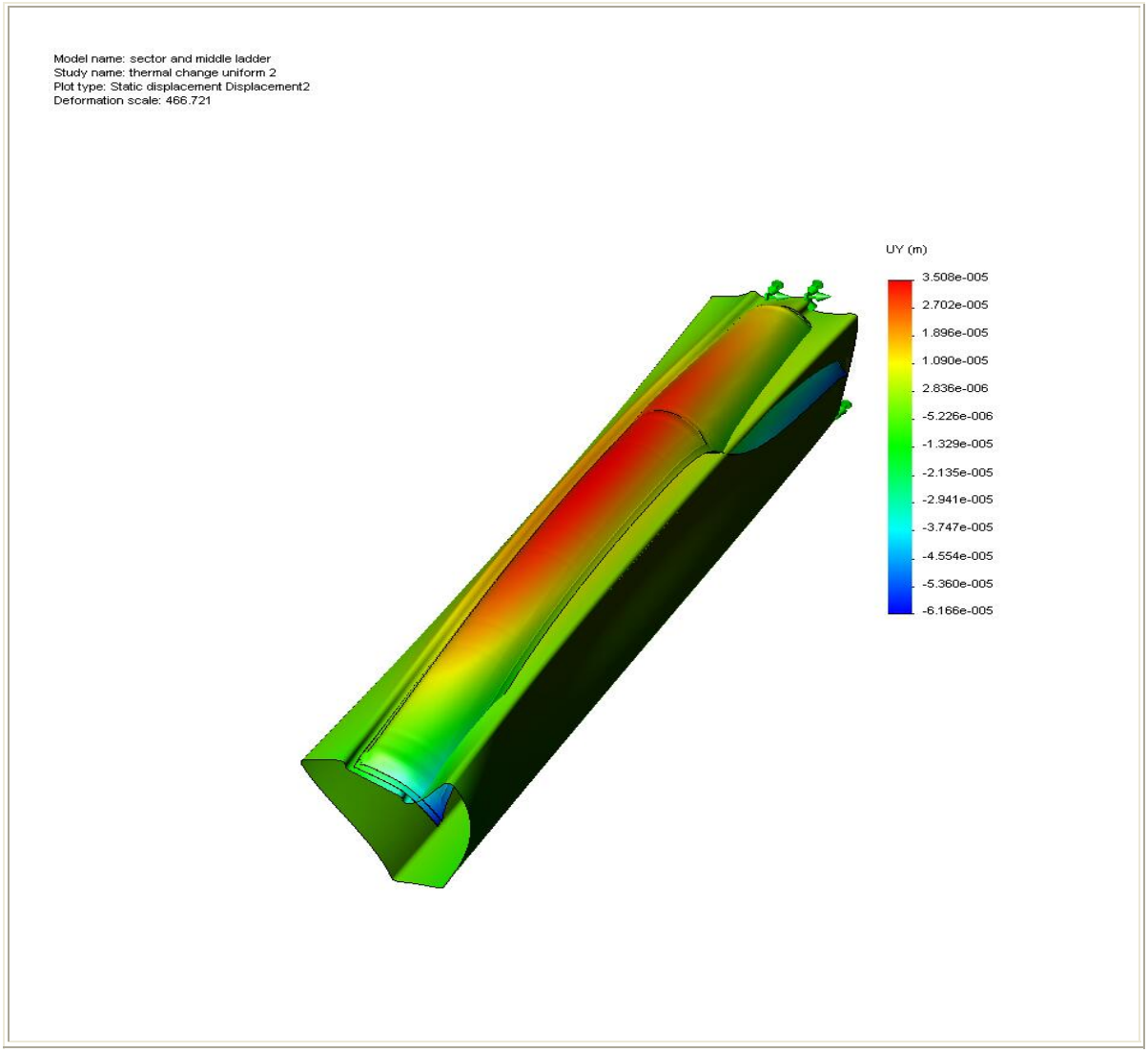

sector and middle ladder-thermal change uniform 2-Displacement-Displacement3

JPEG

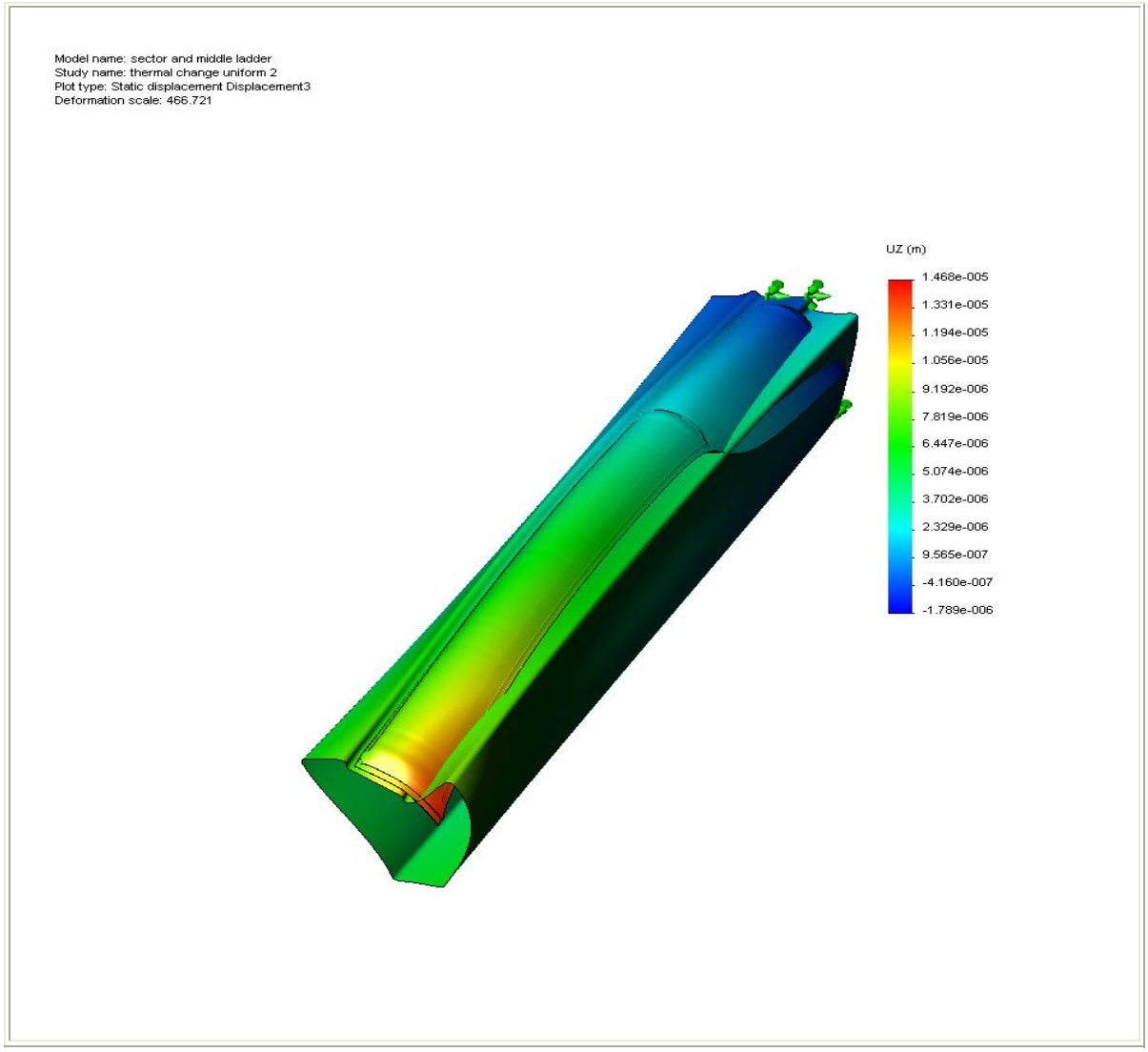

9. Conclusion

The thermally induced mechanical distortion is approximately 35 microns (a bit outside our 20 micron requirement).

10. Appendix

Material name: [SW]ladder carbon corrected

Description:

Material Source: Used SolidWorks material

Material Library Name: carbon composite tube

Material Model Type: Linear Elastic Isotropic

Property Name	Value	Units	Value Type
Elastic modulus	1.3996e+011	N/m^2	Constant
Poisson's ratio	0.33	NA	Constant
Shear modulus	7.0396e+010	N/m^2	Constant
Mass density	1550.1	kg/m^3	Constant
Tensile strength	1.8961e+009	N/m^2	Constant
Yield strength	1.2273e+009	N/m^2	Constant
Thermal expansion coefficient	1e-006	/Kelvin	Constant
Thermal conductivity	46	W/(m.K)	Constant
Specific heat	920	J/(kg.K)	Constant

Material name: [SW]silicon D

Description:

Material Source: Used SolidWorks material

Material Library Name: carbon composite tube

Material Model Type: Linear Elastic Isotropic

Property Name	Value	Units	Value Type
Elastic modulus	1.1032e+011	N/m^2	Constant
Poisson's ratio	0.28	NA	Constant
Shear modulus	4.8953e+010	N/m^2	Constant

Mass density	2325.1	kg/m^3	Constant
Tensile strength	1.1997e+008	N/m^2	Constant
Yield strength	1.1997e+008	N/m^2	Constant
Thermal expansion coefficient	3e-006	/Kelvin	Constant
Thermal conductivity	124	W/(m.K)	Constant
Specific heat	700	J/(kg.K)	Constant

Material name: [SW]acrylic adhesive

Description:

Material Source: Used SolidWorks material

Material Library Name: carbon composite tube

Material Model Type: Linear Elastic Isotropic

Property Name	Value	Units	Value Type
Elastic modulus	44816	N/m^2	Constant
Poisson's ratio	0.49	NA	Constant
Shear modulus	15169	N/m^2	Constant
Mass density	1162.6	kg/m^3	Constant
Tensile strength	3.5163e+005	N/m^2	Constant
Yield strength	3.5163e+005	N/m^2	Constant
Thermal expansion coefficient	0.00072	/Kelvin	Constant
Thermal conductivity	0.17	W/(m.K)	Constant
Specific heat	1400	J/(kg.K)	Constant

Material name: [SW]cable mix no adhesive

Description:

Material Source: Used SolidWorks material

Material Library Name: carbon composite tube

Material Model Type: Linear Elastic Isotropic

Property Name	Value	Units	Value Type
Elastic modulus	2.0684e+010	N/m^2	Constant
Poisson's ratio	0.34	NA	Constant
Shear modulus	1.1032e+010	N/m^2	Constant
Mass density	1660.8	kg/m^3	Constant
Tensile strength	8.2392e+008	N/m^2	Constant
Yield strength	4.7367e+008	N/m^2	Constant
Thermal expansion coefficient	1.1e-005	/Kelvin	Constant
Thermal conductivity	0.2	W/(m.K)	Constant
Specific heat	1175	J/(kg.K)	Constant